ACCELL GROUP
ORIGINAL OPERATING MANUAL

EN

User manual

Cycle in general

+ Supplementary user manual
  Pedelec/S-pedelec

+ Supplementary user manual
  Children's bike

User manual

Balance bike

THE PREMIER CYCLE GROUP
ACCELL GROUP

This manual belongs to the following model/type:

ACCELL GROUP

Guide

Guide

Cycle

Pedelec

Children's bike

Balance bike

Contents

1 Information online 1
2 Warnings 2
3 Explanation of symbols 2
4 Illustrations 4
5 Explanation of terminology 4
5.1 Pedelec/EPAC 4
5.2 S-pedelec/S-EPAC 5
5.3 Children's bikes 5
5.4 Balance bikes 6
5.5 Crankset 6
5.6 Sag 6
5.7 Lockout 6
5.8 Glossary 6
6 Units and abbreviations 7
7 User manual structure 8
8 Further information 9
9 A note on maintenance and repair work 9
10 A note on technical specifications 9

This guide will provide you with an overview of all the signs and symbols used in this original operating manual. For the sake of clarity, the original operating manual will be referred to below as the user manual.

1 Information online

More information about the respective brands can be found at:

Website	Brand(s)
www.atala.it	Atala
www.batavus.com	Batavus
www.ghost-bikes.com	Ghost
www.greens-bikes.de	Green's
www.haibike.com	Haibike
www.koga.com	Koga
www.lapierrebikes.com	Lapierre
www.loekie.nl	Loekie
www.raleigh.co.uk	Raleigh
www.spartabikes.com	Sparta
www.vannicholas.com	Van Nicholas
www.whistlebikes.com	Whistle
www.winora.com	Winora
www.accell-group.com	Accell Group

2 Warnings

The following signal symbols and signal words are used in this user manual to warn against personal injury or damage to property.

Warnings are intended to draw attention to possible dangers. Failure to follow a warning may result in injury to yourself or other people, as well as causing property damage. Read and follow all warnings.

DANGER

This warning identifies a hazard with a high degree of risk, resulting in serious injury or death if not avoided.

WARNING

This warning identifies a hazard with a moderate degree of risk, resulting in serious injury if not avoided.

CAUTION

This warning identifies a hazard with a low degree of risk, resulting in minor or moderate injury if not avoided.

NOTE

This warning calls attention to potential property damage.

3 Explanation of symbols

The following symbols may be used in this original operating manual, on cycle components or on packaging.

Symbol	Explanation
	This symbol provides you with useful additional information about adjustment or use.
	This symbol indicates that you must read the user manual.

CE	Products marked with this symbol meet all applicable European Economic Community regulations.
0-3	This symbol identifies the age rating for young children.
	Do not use the vehicle on public roads.
max 6,5kg max 40kg	This symbol indicates the maximum permissible trailer load and drawbar load of a vehicle with special trailer preparation on the vehicle frame. If the symbol is not present on the vehicle, the standard values for the trailer load from the vehicle operating manual, chapter „Maximum permitted total weight“ apply.
max120kg	This symbol is an example indicating the maximum gross weight limit for the cycle. Refer to the sticker on your cycle to find out its maximum gross weight limit.
2 EN17406	This symbol is an example indicating the cycle category. Refer to the sticker on your cycle to find out its cycle category. You can find a comprehensive description of the cycle categories in the “Cycle categories” chapter of the cycle user manual.

The following symbols are only applicable for the USA:

Symbol	Explanation
MODEL: HAIBIKE XDURO NDURO 9.0 MAXIMUM PERMISSIBLE TOTAL WEIGHT: 265 lbs EPAC 500 Watt 20 mph CLASS 1 ISO4210-2 MTB WINORA-STAIGER GMBH MAX-PLANCK-STRASSE 6 97526 SENNFELD GERMANY 2018 MODEL YEAR 2017 CONSTRUCTION YEAR	This example symbol identifies a class 1 pedelec, which has a power rating of 500 Watts and travels no faster than 20 mph.
MODEL: HAIBIKE XDURO FULLSEVEN 9.0 MAXIMUM PERMISSIBLE TOTAL WEIGHT: 265 lbs EPAC 350 Watt 28 mph CLASS 3 ISO4210-2 MTB WINORA-STAIGER GMBH MAX-PLANCK-STRASSE 6 97526 SENNFELD GERMANY 2018 MODEL YEAR 2017 CONSTRUCTION YEAR	This example symbol identifies a class 3 S-pedelec, which has a power rating of 350 Watts and travels no faster than 28 mph.

	This symbol is an example indicating the maximum gross weight limit for the cycle. Refer to the sticker on your cycle to find out its maximum gross weight limit.

4 Illustrations

The illustrations in this user manual are examples and may differ from the actual design of your cycle. If you lack the necessary expertise regarding your cycle model, contact your dealer.

Example of an illustration:

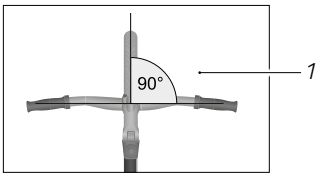

Illustr.: Correct handlebar alignment 2

Illustr.: Illustration structure

1 Example illustration

2 Caption

5 Explanation of terminology

The following terms are used in this user manual:

5.1 Pedelec/EPAC

Contrary to the official standard, EPACs (electric power-assisted cycles) are referred to in this user manual as pedelecs (from “pedal electric cycle”).

The following paragraph is only applicable for Europe:

Pedelecs are cycles with an electric auxiliary motor that provides assistance up to a maximum of 25 km/h (15.5 mph) when you pedal.

Depending on the cycle model, there may be a pushing aid which can accelerate the cycle up to 6 km/h (4 mph) depending on what gear the shifting system is in.

The following paragraph is only applicable for the USA:

Pedelecs are cycles with an electric auxiliary motor that provides assistance up to a maximum of 20 mph when you pedal. By law, pedelecs are class 1 (see the "Explanation of symbols" chapter). There may be a pushing aid depending on the cycle model. How this functions is described in more detail in the drive system user manual enclosed with the cycle.

Pedelecs are cycles that are legally classed as bikes in most countries. Acquaint yourself with the national and regional regulations and classification in your country.

5.2 S-pedelec/S-EPAC

Contrary to the official standard, S-EPACs (speed electric power-assisted cycles) are referred to in this user manual as S-pedelecs (from "speed pedal electric cycle"). **The following paragraph is only applicable for Europe:**

S-pedelecs are cycles with an electric auxiliary motor that provides assistance up to a maximum of 45 km/h (28 mph) when you pedal. Depending on the model, all-electric operation up to a maximum of 18 km/h (11 mph) may also be possible.

The following paragraph is only applicable for the USA:

S-pedelecs are cycles with an electric auxiliary motor that provides assistance up to a maximum of 28 mph when you pedal. There may be a pushing aid depending on the cycle model. How this functions is described in more detail in the drive system user manual enclosed with the cycle. By law, S-pedelecs are class 3 (see the "Explanation of symbols" chapter). In some countries, S-pedelecs are classed as motor vehicles. Acquaint yourself with the national and regional regulations and classification in your country.

5.3 Children's bikes

Children's bikes are pedal-powered category 0 cycles for children, with 12" and 16" wheels.

5.4 Balance bikes

Balance bikes are category 0 cycles without pedals for children aged 3 years and up. Balance bikes are pushed along as the child moves.

5.5 Crankset

A crankset (sometimes known as a chainset) is an assembly consisting of chainrings, pedals and cranks.

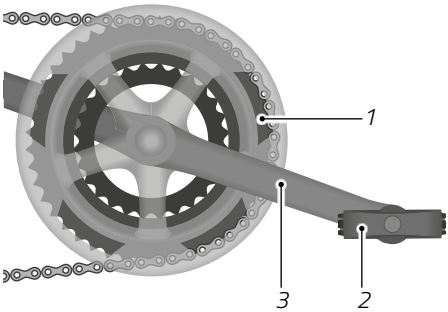

1 *Chainring*
2 *Pedal*
3 *Crank*

Illustr.: Crankset using the example of a derailleur shifting system with 3 chainrings

5.6 Sag

Sag is the amount of compression in suspension elements which is caused by the rider's body weight. Depending on the model of the suspension fork or suspension, and depending on the intended use, the sag is adjusted to a value between 15 % and 40 % of the total suspension travel.

5.7 Lockout

The lockout feature locks the suspension fork. This can reduce bob or squat in the front fork, e.g. where the suspension sinks when pedalling hard.

Depending on the cycle model, the rear suspension may also be equipped with a lockout feature (see the "Suspension" chapter in the cycle user manual).

5.8 Glossary

A glossary of terms used in this user manual is included after the balance bike manual.

6 Units and abbreviations

The following units and abbreviations can be found in this user manual or on components of your cycle:

Unit	Meaning	Unit for
°	Degree	Angular measurement
°C	Degrees Celsius	Temperature
°F	Degrees Fahrenheit	Temperature (USA)
1/s	per second	Revolutions
"	Inches	Unit of measurement (USA), 1 inch = 2.54 cm
A	Amperes	Electrical current
Ah	Ampere hours	Electrical charge
bar	Bars	Pressure
g	Grams	Mass (weight)
h	Hours	Time
Hz	Hertz	Frequency
kg	Kilograms	Mass (weight)
km/h	Kilometres per hour	Speed
kPa	Kilopascals	Pressure
mph	Miles per hour	Speed (USA)
Nm	Newton metres	Torque
psi	Pounds per square inch	Pressure (USA)
V	Volts	Electrical voltage
W	Watts	Electrical power
Wh	Watt hours	Electrical capacity

7 User manual structure

This original operating manual contains four user manuals:

1. **Cycle user manual**

   Provides the basis for all cycle categories, except in the case of the balance bike user manual.

   Contains information for the following cycle categories:

   ➔ Read the entire user manual carefully, paying particular attention to the safety notes.

2. **Pedelec and S-pedelec supplementary user manual**

   Contains special information on pedelecs and S-pedelecs in addition to the vehicle user manual.

   Contains information for the following cycle categories:

   ➔ Read the entire pedelec and S-pedelec supplementary user manual carefully as well.

3. **Children's bike supplementary user manual**

   Contains special information on children's bikes in addition to the vehicle user manual.

   Contains information for the following cycle category:

   ➔ Read the entire children's bike supplementary user manual carefully as well.

4. **Balance bike user manual**

   Contains all information about balance bikes.

   Contains information for the following cycle category:

   ➔ Read the entire balance bike user manual carefully.

8 Further information

You should receive all important documents and necessary information from your dealer along with your cycle:

- The completed cycle passport document and handover certificate, which can be found at the end of the standard print version of the original operating manual.
- A standard print version of the original operating manual for your cycle. Further information can be found on the Internet on the respective brand homepage (see list in chapter "Information online").
- If applicable, manufacturer manual for components.
- If purchasing a pedelec, you will also receive a quick-start guide for the pedelec drive system. A complete original user manual for your pedelec drive system can be found on the Internet on the respective brand homepage (see list in chapter "Information online").
- If purchasing an S-pedelec, you will also receive a complete original operating manual for your S-pedelec drive system.

- On your cycle you will find:
  - The cycle category number for your cycle
  - The maximum gross weight limit
  - The weight of the vehicle model (rounded)
  - The nameplate with type designation

➔ Compare the details specified on your cycle passport and the cycle category number on your cycle against the "User manual structure" chapter to find all the information about your cycle model.

9 A note on maintenance and repair work

Only carry out steps described in the user manual if you have the necessary expertise and the tools required. Otherwise have the work carried out by a dealer.

10 A note on technical specifications

You can obtain information on the technical data and equipment of your vehicle model in writing from your dealer or on the respective brand homepage (see list in the "Online information" section).

ACCELL GROUP

User manual

Cycle

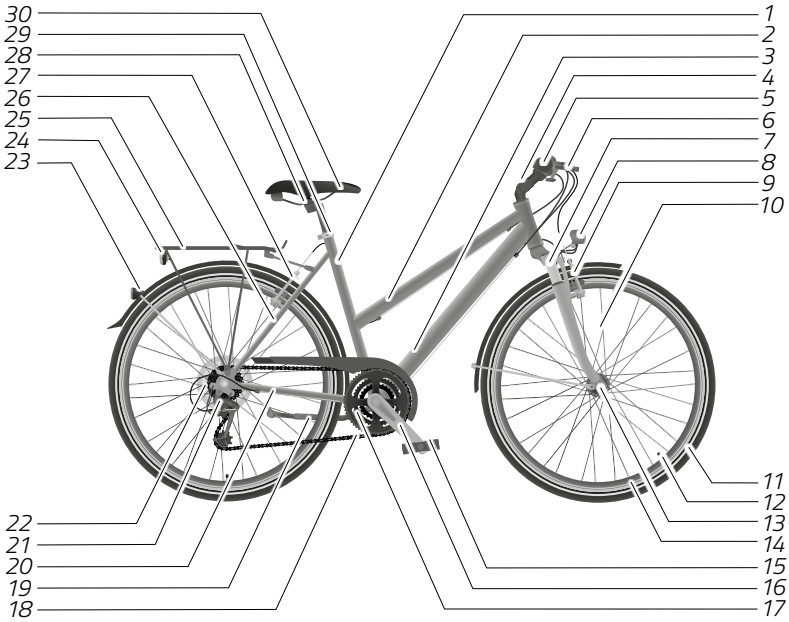

1	Seat tube	16	Crank
2	Top tube	17	Chainrings
3	Down tube	18	Chain
4	Handlebar stem	19	Kickstand
5	Handlebars	20	Chain stays
6	Brake lever	21	Rear derailleur
7	Front fork / suspension fork	22	Cassette of sprockets
8	Headlamp	23	Reflector
9	Front brake	24	Rear lamp
10	Spoke	25	Luggage carrier
11	Tyre	26	Seat stays
12	Valve	27	Rear brake
13	Wheel hub	28	Saddle clamp
14	Rim	29	Seat post clamp
15	Pedal	30	Saddle

Example illustration

Contents

1 Basics 1
1.1 Reading and storing the user manual. 1
1.2 Proper use 1
1.3 Cycle categories 2
1.4 Maximum gross weight limit 5
1.5 Seating position 6
1.6 Frame height. 7
1.7 Helmet 8
1.8 Luggage carrier 8
1.8.1 Luggage carrier with clamp 10
1.8.2 Luggage carrier with bungee cord and no clamp 11
1.8.3 Low-rider luggage carrier for panniers 11
1.8.4 Luggage system carrier 11
1.9 Kickstand variants 12
1.9.1 Side kickstand and rear kickstand. 12
1.9.2 Bipod kickstand 12
1.10 Bicycle trainers. 13
1.11 Aero handlebars on racing bikes 13
2 Before setting off 14
2.1 Before every ride 14
2.2 Before the first ride 17
3 Safety 18
3.1 General safety notes 18
3.2 Notes on road use 23
3.3 Notes on carrying children 24
3.3.1 Child seat 27
3.3.2 Child trailer 28
3.4 Notes on transportation 29
3.4.1 Notes on luggage 29
3.4.2 Notes on fitting trailers 30
3.4.3 Notes on cargo and dog trailers 31
3.4.4 Notes on transporting the cycle by car 32
3.5 Notes on torques 34
3.6 Notes on screw turning directions 36

3.7 Notes on wear . . . 36
3.8 Notes on carbon components . . . 38
3.8.1 Falls and accidents . . . 39
3.8.2 Bike carriers . . . 39
3.8.3 Torques . . . 39
3.9 Residual risks . . . 40
4 Basic adjustments . . . 41
4.1 Quick releases . . . 41
4.2 Saddle . . . 42
4.2.1 Adjusting the saddle height . . . 43
4.2.2 Minimum insertion depth . . . 44
4.2.3 Adjusting the minimum pull-out height . . . 45
4.2.4 Adjusting the saddle tilt . . . 45
4.2.5 Adjusting the reach . . . 46
4.3 Handlebars and handlebar stems . . . 46
4.3.1 Minimum insertion depth . . . 47
4.3.2 Adjusting the handlebar stem tilt . . . 47
4.3.3 Aligning the handlebars . . . 48
4.4 Controls . . . 48
4.5 Brake lever . . . 48
4.5.1 Check the arrangement of the brake lever . . . 49
4.5.2 Adjusting the position . . . 49
4.5.3 Adjusting the grip width . . . 50
4.6 Pedals . . . 51
4.6.1 Folding pedal . . . 51
4.6.2 Block pedal . . . 52
4.6.3 Clipless pedal . . . 52
4.6.4 Foot clearance . . . 53
4.7 Lighting . . . 54
4.7.1 Hub dynamo . . . 55
4.7.2 Battery-powered and rechargeable lighting . . . 55
4.7.3 Headlamp . . . 56
4.7.4 Rear lamp . . . 56
4.7.5 Reflectors . . . 56
4.8 Suspension . . . 56
5 Brake . . . 58
5.1 Basics . . . 58

5.1.1 Coaster brake . . . 58
5.1.2 Brake lever . . . 58
5.1.2.1 Disc brake . . . 59
5.1.2.2 Rim brake . . . 59
5.2 Operation . . . 61
5.2.1 Operating the brake lever . . . 61
5.2.2 Operating the coaster brake . . . 62
5.3 Bedding in disc brakes . . . 62
5.4 Maintaining braking force . . . 63
5.5 ABS system . . . 63
5.6 Adjustments . . . 64
5.6.1 Adjusting the brake cable tension in mechanical brakes . . . 64
5.6.2 Adjusting the pressure point . . . 65
6 Derailleur shifting system . . . 66
6.1 Basics . . . 66
6.1.1 Mechanical derailleur shifting system . . . 66
6.1.2 Electronic derailleur shifting system . . . 67
6.1.3 Gear combinations . . . 67
6.2 Operation . . . 68
6.2.1 Shifting sprockets . . . 69
6.2.2 Shifting chainrings . . . 70
6.2.3 Electronic derailleur shifting system . . . 70
6.2.4 Derailleur/hub shifting system (Dual Drive) . . . 71
6.2.5 Operating the shift levers on a racing bike . . . 71
6.3 Adjustments . . . 72
6.3.1 Adjusting the rear derailleur . . . 73
6.3.2 Adjusting the front derailleur . . . 74
6.3.3 Readjusting the shift cable tension . . . 75
6.3.4 Adjusting the derailleur shifting system on a racing bike . . . 75
7 Hub shifting systems . . . 76
7.1 Basics . . . 76
7.1.1 Automatic shifting system (Automatix) . . . 76
7.1.2 Stepless gear shifting system (NuVinci) . . . 77
7.1.3 Stepless automatic gear shifting system (NuVinci Harmony) . . . 77
7.1.4 Electronic hub shifting system . . . 77
7.2 Operation . . . 77
7.2.1 Hub shifting systems with gear levels . . . 78

7.2.2 Stepless hub shifting systems . . . 79
7.2.3 Derailleur/hub shifting system (Dual Drive) . . . 79
7.3 Adjustments . . . 80
7.3.1 Adjusting the shift cable tension . . . 80
7.3.2 Adjusting the shift cable tension in a NuVinci shifting system . . . 82
8 Pinion gearbox . . . 83
8.1 Before every ride . . . 83
8.2 Shifting gears with a Pinion gearbox . . . 84
8.3 Troubleshooting . . . 85
8.4 Cleaning a Pinion gearbox . . . 86
8.5 Maintaining a Pinion gearbox . . . 87
8.5.1 Maintaining a Pinion gearbox with a chain drive . . . 88
8.5.2 Maintaining a Pinion gearbox with a belt drive . . . 88
8.6 Oil change . . . 88
9 Belt drive . . . 90
9.1 Belt drive structure . . . 90
9.2 Using the belt drive . . . 90
9.3 Checking the belt tension . . . 91
9.4 Belt drive wear . . . 91
9.4.1 Visually inspecting the belt for wear . . . 91
9.4.2 Visually inspecting the belt drive for wear . . . 92
9.4.3 Visually inspecting the chainring for wear . . . 93
9.5 Cleaning the belt drive . . . 93
10 Wheels and tyres . . . 94
10.1 Tyres and valves . . . 95
10.1.1 Valve types . . . 96
10.1.2 Tyre pressure . . . 97
10.2 Rims and spokes . . . 98
10.3 Fitting and removing the front/rear wheel . . . 99
10.3.1 Front/rear wheels with quick-release axles . . . 101
10.3.1.1 Fitting . . . 101
10.3.1.2 Removal . . . 101
10.3.2 Front/rear wheels with thru-axles . . . 102
10.3.2.1 Fitting . . . 102
10.3.2.2 Removal . . . 102
10.3.3 Front/rear wheels with screw joints . . . 103
10.3.3.1 Fitting . . . 103

10.3.3.2 Removal . . . 103
10.3.4 Carbon wheels . . . 103
11 Telescopic seat post . . . 105
11.1 Basics . . . 105
11.2 Operation . . . 106
11.3 Adjustments . . . 107
11.3.1 Adjusting the cable tension . . . 107
11.3.2 Adjusting the extension speed . . . 107
11.3.3 Telescopic seat post remote control position . . . 107
11.3.4 Adjusting a pneumatic telescopic seat post . . . 107
11.3.5 Bleeding a hydraulic telescopic seat post . . . 108
12 Suspension . . . 109
12.1 Suspension seat post . . . 109
12.2 Suspension fork and rear suspension . . . 109
12.2.1 Basics . . . 109
12.2.2 Operation . . . 111
12.2.3 Adjustments . . . 113
12.2.3.1 Compression and rebound . . . 113
12.2.3.2 Sag . . . 113
12.2.3.3 Lockout . . . 114
13 Cleaning . . . 115
13.1 Brakes . . . 117
13.2 Suspension . . . 118
13.3 Gear shifting system . . . 118
13.4 Chain . . . 119
14 Maintenance . . . 120
14.1 Inspection intervals . . . 122
14.2 Screw joints . . . 123
14.3 Frame and rigid fork . . . 123
14.4 Suspension fork . . . 123
14.5 Luggage carrier and mudguards . . . 124
14.6 Saddle . . . 124
14.7 Handlebars and handlebar stems . . . 124
14.8 Adjusting the headset . . . 125
14.8.1 Conventional handlebar stem with an internal clamping mechanism . . . 126
14.8.2 Handlebar stem with an external clamping mechanism . . . 126

14.9 Wheels . . . 127
14.9.1 Rims and spokes . . . 128
14.9.2 Rim wear indicator with rim brakes . . . 128
14.9.3 Tyres . . . 129
14.10 Flat tyre . . . 129
14.11 Removing the wheel . . . 129
14.11.1 Preparing the brakes . . . 130
14.11.1.1 Preparing mechanical rim brakes . . . 131
14.11.1.2 Preparing hydraulic rim brakes . . . 132
14.11.1.3 Preparing the coaster brake . . . 132
14.11.1.4 Preparing the brakes on racing bikes . . . 133
14.11.2 Removing the front wheel . . . 133
14.11.3 Removing the rear wheel . . . 134
14.11.4 Removing clincher or folding tyres . . . 135
14.11.5 Checking the rim tape . . . 136
14.11.6 Fitting clincher or folding tyres . . . 137
14.11.7 Fitting UST tyres . . . 138
14.11.8 Fitting the wheel . . . 139
14.11.8.1 Fitting the front wheel . . . 139
14.11.8.2 Fitting the rear wheel . . . 139
14.11.8.3 After fitting the wheels . . . 140
14.12 Brake system . . . 141
14.12.1 Rim brakes in general . . . 142
14.12.1.1 Checking a brake pad . . . 142
14.12.1.2 Changing a brake pad . . . 143
14.12.1.3 Changing a screw-type brake pad . . . 144
14.12.1.4 Changing a brake pad with a fixing pin . . . 144
14.12.1.5 Changing the brake block holders on a racing bike . . . 144
14.12.1.6 Adjusting brake pad distance on a racing bike . . . 146
14.12.2 Mechanical rim brake . . . 147
14.12.2.1 Changing a brake block holder . . . 147
14.12.2.2 Adjusting the brake block holder distance . . . 149
14.12.2.3 Checking the brake system . . . 150
14.12.3 Hydraulic rim brake . . . 150
14.12.3.1 Changing the brake block holders . . . 151
14.12.3.2 Adjusting brake block holder distances (Magura HS models) . . . 152
14.12.3.3 Checking the brake system . . . 153
14.12.4 Disc brake . . . 153

14.12.4.1 Bedding in a disc brake 154
14.12.4.2 Checking the brake disc 154
14.12.4.3 Adjusting the pressure point 154
14.12.4.4 Adjusting the brake calliper 155
14.12.4.5 Changing brake pads 155
14.12.4.6 Checking a brake pad 157
14.12.4.7 Checking the brake system 157
14.12.5 Coaster brake 158
14.13 Crankset 159
14.14 Lighting set 159
14.15 Hub dynamo 160
14.16 Chain tension 160
14.16.1 Adjusting the chain tension with hub gears 160
14.16.2 Chain tension in derailleur shifting systems 161
14.16.3 Shift cables 161
14.16.4 Derailleur shifting system 161
14.17 Tyre pressure recommendations 162
14.18 Greasing and oiling 163
14.19 Cleaning and maintenance schedule 164
15 Storage 168
16 Disposal 169
16.1 Cycle 169
16.2 Electronic components and accessories 169
16.3 Packaging 169
16.4 Tyres and inner tubes 169
16.5 Lubricants and care products 169

1 Basics

1.1 Reading and storing the user manual

This user manual is part of your cycle. The cycle user manual refers to bikes, racing bikes, pedelecs, S-pedelecs, children's bikes and balance bikes collectively as cycles. The user manual contains important information about adjustment and use. Read the entire user manual carefully, paying particular attention to the safety notes, before using the cycle. Also carefully and thoroughly read the supplementary user manuals depending on the cycle model and cycle category. Failure to follow this user manual may result in serious injury or damage to the cycle. Keep the user manual to hand. If passing the cycle on to a third party, it is essential that you include this user manual along with it.

1.2 Proper use

Neither the manufacturer nor the dealer accept any liability for damage caused due to improper use. Use the cycle only as described in this user manual. Any other use is deemed improper and may result in accidents, serious injury or damage to the cycle.

Converting a cycle into a pedelec or S-pedelec through retrofitting is not permitted.

Manipulating the drive unit on pedelecs and S-pedelecs is prohibited.

Changes or conversions to the vehicle that change the characteristics of the vehicle (e.g. ski runners, load transport attachments, sidecars) are not permitted.

Warranty claims may be endangered and may expire if the vehicle is not used as intended.

The cycle is designed for use by one person, with the seating position adjusted to suit their height (see the "Basics / Seating position" chapter).

The use of child seats, child trailers and other bicycle trailers (load and dog trailers) is not permitted for vehicles in vehicle categories 0 and 6. If a child seat or a trailer is used with a vehicle of category 2, 3, 4 or 5, the driver must comply with the intended use of category 2. The specified instructions for use remain valid for category 1.

The use of child seats, child trailers and other bicycle trailers is not permitted for:

- Vehicles with a carbon rear triangle, unless it has a special mount for securing the trailer hitch
- S-pedelec cycles
- Children's and junior bikes with size 12", 16", 20" or 24" wheels.

For further information, please read the chapter "Safety / Notes on bringing along children" and pay attention to special instructions for use on your vehicle. Contact your dealer before using child trailers or child seats. Racing bikes and fitness bikes are designed solely for use on roads and paths with a smooth asphalt, concrete or paved surface. Any use on

unsurfaced paths may cause the cycle to break down. The installation of a luggage rack, child seat or trailer is not permitted.

A racing bike / fitness bike is defined as a cycle

- with drop handlebars (racing bike) or flat handlebars (flat bar on a fitness bike)
- with narrow tyres with very little or no tread
- with a rigid frame
- which requires a stretched out seating position, as in cycle sports

Proper use of the cycle on the road requires you to know, understand and observe national and regional regulations (see the “Safety / Notes on road use” chapter).

1.3 Cycle categories

The cycle is marked with a cycle category symbol. This symbol is generally located on the left-hand side of the seat tube:

- ➔ Check the category indicated on your cycle against the cycle categories in the table below.
- ➔ Read all the chapters that are relevant to your cycle category.

Symbol	Cycle category	Use
	Category 0 cycles are generally 12" balance bikes and 12" or 16" children’s bikes.	Category 0: - For children aged 3 years and up - Only for use under the supervision of a parent or guardian - Not permitted on the road - Not permitted in competitions - Not suitable for jumps or acrobatics
	Category 1 vehicles are vehicles designed for purely urban infrastructure (road conditions).	Category 1: - only for asphalt, concrete or paved roads and paths - permanent contact of the wheels with the ground must be guaranteed - participation in competitions is not permitted - not suitable for drops, jumps and acrobatics - the intended range of average speed is 15 to 25 km/h (9 to 15.5 mph)

Symbol	Cycle category	Use
6 EN17406	Category 6 vehicles are usually bicycles, pedelecs and S-pedelecs of the racing bike or fitness bike (urban bike)/time trial/ triathlon bike type.	Category 6: - only for asphalt, concrete or paved roads and paths - permanent contact of the wheels with the ground must be guaranteed - participation in competitions is permitted - suitable for downhill and sprints - not suitable for drops, jumps and acrobatics - the intended range of average speed is 30 to 55 km/h (18.5 to 34 mph)
2 EN17406	Category 2 vehicles are usually bicycles, pedelecs and S-pedelecs of the city, trekking, cross-trek-king, touring or cargo bike type, as well as 24" youth bikes and 20" children's bikes.	Category 2: - Includes category 1, plus surfaced and naturally firm paths with moderate inclines - Can be ridden down steps of up to 15 cm/5.9", e.g. kerbs/curbs - Not permitted in competitions - suitable for recreational riding and trekking under moderate strain - Not suitable for jumps or acrobatics - the intended range of average speed is 15 to 25 km/h (9 to 15.5 mph)
3 EN17406	Category 3 cycles are generally bikes, pedelecs and S-pedelecs in the style of mountain bikes designed for cross-coun-try, marathon and tour-ing use, plus bikes in the gravel, cyclo-cross and all-track segments.	Category 3: - Includes categories 1 and 2, plus rough trails with small obstacles, and unsurfaced routes that re-quire good riding technique - suitable for sport and competition riding with moderate technical demands of the trails - Drops and jumps permitted up to a max. height of 60 cm/23.6" (with appropriate riding technique) - Not suitable for acrobatics

Symbol	Cycle category	Use
	Category 4 vehicles are usually bicycles, pedelecs and S-pedelecs of the mountain bike type with the all mountain / trail bike purpose.	Category 4: - Includes categories 1, 2 and 3 - Larger obstacles and higher speeds require increased riding skill - Permitted in competitions - suitable for descents on unpaved roads - Drops and jumps permitted up to a max. height of 120 cm/47.2" (with appropriate riding technique) - Not suitable for acrobatics
	Category 5 cycles are generally bikes, pedelecs and S-pedelecs in the style of mountain bikes designed for enduro/freeride/downhill/dirtjump use.	Category 5: - Includes categories 1, 2, 3 and 4, plus very fast and very demanding terrain with extreme downward slopes - Very high demands on riding skill - Permitted in competitions - suitable for jumps and descents on unpaved paths - Long drops and jumps permitted (with appropriate riding technique) - Not suitable for acrobatics

Balance bikes with 12" wheels correspond to DIN EN 71

Balance bikes with 12" and 16" wheels correspond to DIN EN ISO 8098

Pedelecs comply with DIN EN 15194 and partly also with DIN EN ISO 4210. S-pedelecs comply with DIN EN 15194 or the regulation (EU) 168/2013 (L1e-B). All other bicycles comply with DIN EN ISO 4210.

The intended use is based on DIN EN 17406

1.4 Maximum gross weight limit

DANGER

Component breakage due to overloading the cycle.

Risk of accident and injury!

➔ Observe the maximum gross weight limit for the cycle.

NOTE

Material damage due to overloading the cycle.

Risk of damage!

➔ Observe the maximum gross weight limit for the cycle.

The cycle has a maximum gross weight limit that may not be exceeded.

➔ Observe the maximum gross weight limit for the cycle.

➔ Contact your dealer if you have any questions about the maximum gross weight limit.

This symbol is only applicable for Europe:

	This symbol (example) indicates the maximum gross weight limit for the cycle. Refer to the sticker on your cycle to find out its maximum gross weight limit. The sticker is generally located on the lower left-hand side of the seat tube.

This symbol is only applicable for the USA:

	This symbol (example) indicates the maximum gross weight limit for the cycle. Refer to the sticker on your cycle to find out its maximum gross weight limit. The sticker is generally located on the lower left-hand side of the seat tube.

The maximum gross weight limit is calculated as follows: Cycle + rider + luggage / backpack / child seat etc. = maximum gross weight limit.

Maximum gross weight limit and operating trailers:

If a trailer is used, the maximum towable load of 40 kg unbraked / 80 kg braked (trailer + payload) must not be exceeded.

	This symbol indicates the vehicle's maximum permissible trailer load. Note any additional information on the bike or trailer. If these specifications are less than a maximum of 40 kg, these specifications must be observed. Observe the trailer manufacturer's specifications for the drawbar load.

If a trailer is used, the total weight of the trailer (trailer + payload) is included in the total weight of the vehicle and must be taken into account with regard to the maximum permissible total weight of the vehicle. If necessary, the vehicle is approved for a higher permissible total weight as a team with a trailer. Pay attention to the instructions on the vehicle and in the model-specific documents.

1.5 Seating position

CAUTION

Muscle tension and joint pain due to an incorrectly adjusted seating position.

Risk of injury!

➔ Have the seating position correctly adjusted by your dealer.

CAUTION

Limited ability to reach controls due to an incorrectly adjusted seating position.

Risk of accident and injury!

➔ Have the seating position correctly adjusted by your dealer.

The optimum seating position depends on the size and shape of the cycle frame, the size of the rider, and how the handlebars and saddle are adjusted. Optimum seating position adjustments require expertise.

The optimum seating position can also depend on how the cycle is used, e.g. primarily for sports.

The main characteristics of an optimum seating position are:

– When one pedal is up, the arms and the top knee are all at a 90° angle. The lower leg is slightly bent (see “Illustr.: Optimum seating position (A)”).

- When one pedal is forward, the knee is over the axle of the front pedal (see “Illustr.: Optimum seating position (B)”).
- The arms are relaxed and bent slightly outwards (not visible in the picture).
- The back is leant slightly forwards, not vertical to the seat post.

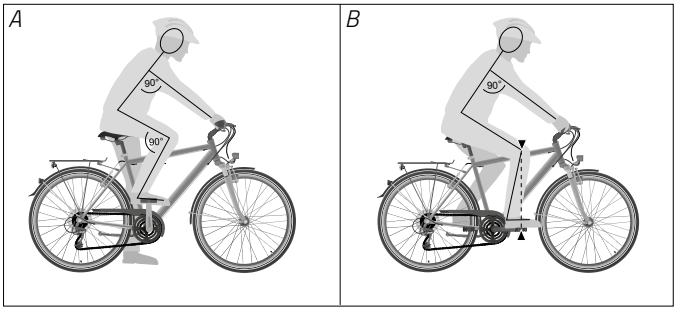

Illustr.: Optimum seating position (example)

➔ Read the “Basic adjustments / Saddle” and “Basic adjustments / Handlebars and handlebar stems” chapters on adjusting the saddle or handlebars to the correct height.

1.6 Frame height

For a safe and comfortable ride, it is important to buy a cycle with the right height and length of frame for the rider. The right frame height depends on the rider’s inside leg (inseam) measurement. It is important to take the inside leg measurement into account so that it is possible to quickly and safely stop the cycle and dismount in dangerous situations.

➔ Consult a dealer about the right frame height.

1.7 Helmet

- Wear a suitable and correctly fitting helmet every time you ride your cycle.
- Consult your dealer when buying a helmet.
- Have your dealer adjust your helmet to fit you.
- Refer to and follow the information enclosed by the helmet manufacturer.
- Ensure that the helmet is correctly positioned (see "Illustr.: Helmet position (A)").
- Always fasten the clasp under your chin.

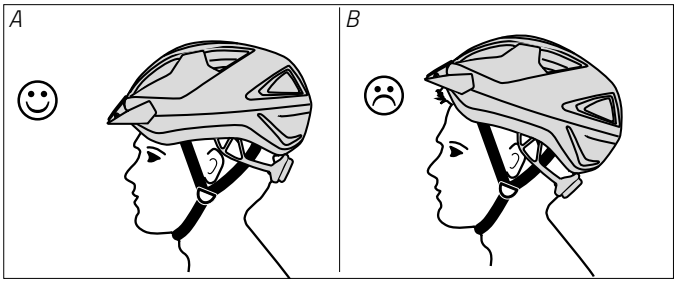

Illustr.: Helmet position ((A) correct, (B) sitting too far back) (example)

1.8 Luggage carrier

CAUTION

Blockage of the front wheel results from incorrect loading of the front luggage carrier.

Risk of accident and injury!

- Only load the front luggage carrier upwards.
- Position your load so that it does not hang down at the sides and does not hinder steering.
- Position your load so that it cannot get caught in the spokes of the front wheel.

CAUTION

Altered handling characteristics due to transport gear that was fitted at a later date.

Risk of injury!

- Adapt your riding style to suit the altered handling characteristics.

NOTE

Overloading the luggage carrier.

Risk of damage!

- Observe the maximum load limit for the luggage carrier.
- The luggage carrier is only approved for transporting luggage.

NOTE

Damage to cycle components due to fitting a luggage carrier where this is not permitted.

Risk of damage!

- Never fit a luggage carrier to the seat post.
- Never fit a luggage carrier on a full-suspension frame.

A luggage carrier is a device on the cycle which can be used to transport luggage.

Depending on the cycle model, it may be a luggage carrier with a clamp, a luggage carrier with bungee cords and no clamp, or a low-rider luggage carrier for panniers.

Many models also come equipped as standard with luggage system carriers. There are a variety of accessories available for these luggage system carriers, such as baskets or bags that lock in place on the luggage area.

- Consult your dealer about suitable accessories.

If your cycle is equipped with a luggage carrier:

- Do not make any alterations to the luggage carrier.
  - Consult your dealer if you would like to replace the luggage carrier.
- Do not overload the luggage carrier.
  - Observe the maximum load limit for the luggage carrier.
  - The maximum load limit is generally stamped on the surface of the luggage carrier.
  - If the maximum load limit is not stamped on the surface of the luggage carrier, consult your dealer.
- Load the luggage carrier evenly.
  - If you use panniers, ensure that the weight of the luggage is distributed equally between the left and right-hand sides.
- Make sure that the luggage is adequately secured to prevent it falling off.
  - Use bungee cords to secure luggage if necessary.

If your cycle is not equipped with a luggage carrier:

- A luggage carrier is only permitted to be fitted to the rear suspension of the cycle at a later date if the required fastening points are already present on the frame. Should this not be the case, it is forbidden to fit the carrier at a later date. Also observe any indications on the cycle, if present.
- The retrofitting of a luggage carrier or other transport gear to the front wheel fork is forbidden unless this has been explicitly approved.
- The retrofitting of a luggage carrier or other transport gear to the front wheel fork and/or rear suspension of S-pedelecs is forbidden.

Make sure that illumination systems and reflectors are not covered when transport gear is fitted at a later date or, if necessary, their position is changed.

1.8.1 Luggage carrier with clamp

1. Grasp the clamp, carefully pull it upwards and hold it in this position.
2. Place your luggage on the luggage carrier.
3. Fasten your luggage on the luggage carrier by slowly lowering the clamp.
4. Make sure that the luggage is secured to prevent it falling off.

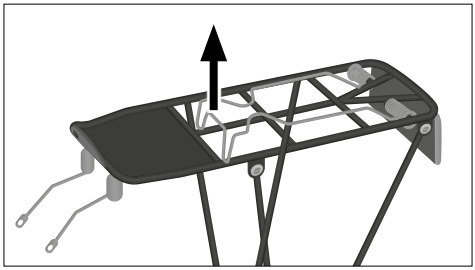

Illustr.: Luggage carrier with a clamp (example)

1.8.2 Luggage carrier with bungee cord and no clamp

1. Release the bungee cords.
2. Place your luggage on the luggage carrier.
3. Pull the bungee cords firmly over the luggage.
4. Fasten the bungee cords to the attachments provided on the frame of the luggage carrier.
   - ➔ Make sure that the luggage is secured to prevent it falling off.

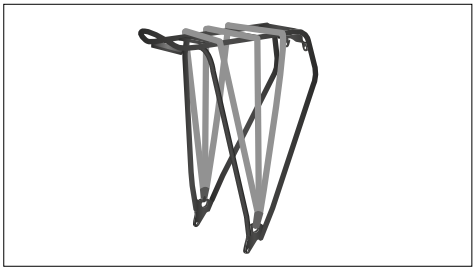

Illustr.: Luggage carrier with bungee cords (example)

1.8.3 Low-rider luggage carrier for panniers

1. Fill the panniers.
2. Ensure that the panniers are of equal weight.
3. Close the panniers so that there are no dangling straps or buckles.
4. Mount the panniers on the luggage carrier using the hanger.
   - ➔ Make sure that the bags are firmly in place on the low-rider luggage carrier and secured to prevent them falling off.

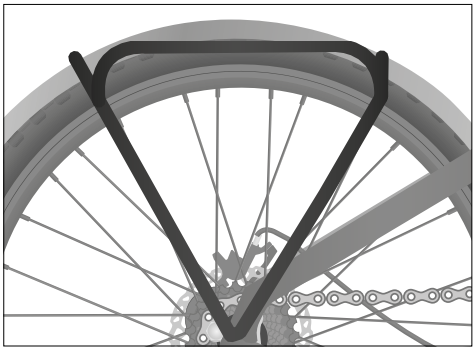

Illustr.: Low-rider luggage carrier (example)

1.8.4 Luggage system carrier

- ➔ Refer to and follow the information enclosed about the features of your luggage system carrier.
- ➔ If necessary, consult your dealer about features and suitable accessories.

1.9 Kickstand variants

A kickstand is a device for parking the cycle in an upright position after use.

Kickstand-equipped models have a central side kickstand, a central bipod kickstand or a rear kickstand (see "Illustr.: Kickstand variants").

If your cycle is not equipped with a kickstand and you would like to have one retrofitted:

- ➔ Consult your dealer about retrofitting a kickstand.
- ➔ Have the kickstand fitted by your dealer.
- ➔ Note that retrofitted kickstands are not permitted on carbon frames.

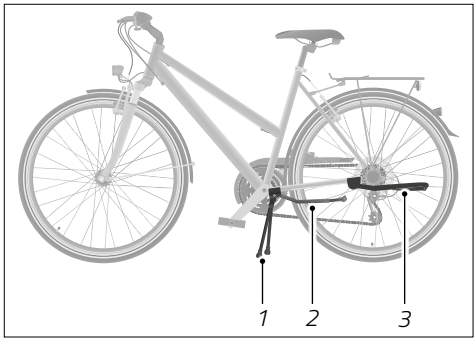

Illustr.: Kickstand variants (example)

1 Central bipod kickstand

2 Central side kickstand

3 Rear kickstand

1.9.1 Side kickstand and rear kickstand

1. To flip down the central side kickstand or rear kickstand, hold the cycle firmly.
2. Push the side or rear kickstand downwards with your foot.
3. Set the cycle on the side or rear kickstand.
4. Before letting go of the cycle, make sure that it is stable on the side or rear kickstand and cannot fall over.

- ➔ To flip the side or rear kickstand up again, take the weight off it and push it upwards with your foot.

1.9.2 Bipod kickstand

1. To flip down the central bipod kickstand, hold the cycle firmly.
2. Push the bipod kickstand downwards with your foot.
3. Fix the bipod kickstand in place with your foot.
4. Push the cycle backwards so that it sits on the bipod kickstand.
5. Before letting go of the cycle, make sure that it is stable on the bipod kickstand and cannot fall over.

- ➔ To flip the bipod kickstand up, push the cycle forwards. This movement will push the bipod kickstand upwards.
- ➔ Before riding off, check that the kickstand is fully up and not dragging on the ground.

1.10 Bicycle trainers

WARNING

Incorrect operation of the bicycle trainer due to insufficient knowledge.

Risk of accident and injury!

- Familiarise yourself with the features of the bicycle trainer before operation and use.

When using bicycle trainers, only what are known as "bicycle rollers" are permitted. These rollers do not attach to the cycle.

If applicable, the tyres of the cycle must be adjust to the bicycle trainer.

Motorised cycles of any kind, as well as Category 0 cycles and children's 20" and youth 24" bicycles, are excluded from use with bicycle trainers.

1.11 Aero handlebars on racing bikes

WARNING

Longer braking distance due to greater distance from the brake levers.

Risk of accident!

- Familiarise yourself with the aero handlebars and the change of grip required to reach the brake levers.
- Take particular care to look ahead and anticipate while riding if you use aero handlebars.

"Aero" handlebars are used to allow aerodynamic positioning on a racing bike, for example in triathlons and time trials.

Only category 1 cycles and racing bikes without motor assistance may be retrofitted with aero handlebars.

The shift levers on aero handlebars are often at the ends of the bars (see the "Derailleur shifting system / Operation / Operating the shift levers on a racing bike" chapter). The brake levers are at the ends of the standard handlebars. When the racing bike is ridden in an aerodynamic position, the brake levers are out of the rider's immediate reach.

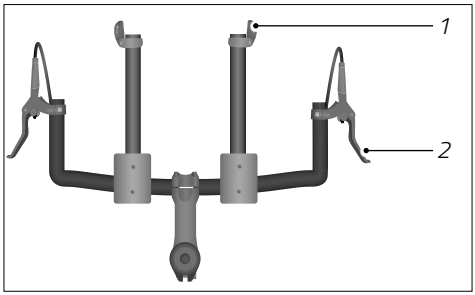

Illustr.: Distance between the shift levers and brake levers on aero handlebars (example)

1 Shift lever

2 Brake lever

- Keep off the road while you familiarise yourself with the handling of aero handlebars and the change of grip required to reach the brake levers.
- When practising with the handlebars, eliminate other potential hazards such as inexperienced use of clipless pedals. Limit yourself to practising with the handlebars at first.
- Adapt your riding style to suit the altered handling characteristics.

2 Before setting off

This chapter contains information about how to put the cycle into use.

2.1 Before every ride

WARNING

Material breakage due to usage-related wear and loose screw joints.

Risk of accident and injury!

- Check the cycle according to the inspection instructions before every ride.
- Only use the cycle if it is undamaged.
- Only use the cycle if you find no signs of excessive wear and no loose screw or clip-type joints.

➔ Check the cycle according to the inspection instructions before every ride.

Inspection instructions	
Screw and clip-type joints	Visually inspect screw and clip-type joints
Brakes	Test brake functionality
Gear shifting system	Test gear shifting system functionality
Wheels	Visually inspect for correct positioning and alignment
	Visually inspect thru-axles, quick releases and/or screw joints
Tyres	Visually inspect tyres for cracks or foreign bodies
	Check and adjust tyre pressure
Frame	Visually inspect frame for cracks, deformation or discolouration
Suspension	Test functionality by compressing and extending
Rims and spokes	Visually inspect rims and spokes
Quick releases	Check preload
	Visually inspect quick releases for correct positioning
Saddle / seat post	Visually inspect saddle / seat post
Handlebars / handlebar stem	Check handlebars and handlebar stem are firmly in place
	Visually inspect handlebars and handlebar stem for cracks, deformation or discolouration
Lighting	Test lighting functionality
Bell	Test bell functionality

1. With brakes that have quick-release levers, check both brakes to see whether these levers are open (see "Illustr.: Quick-release lever position").
2. Test the functionality of the brakes.
   - ➔ Operate the brake levers, and coaster brake if applicable, and listen for unusual noises.
   - ➔ Check that the cycle is difficult or impossible to push with the brake applied.

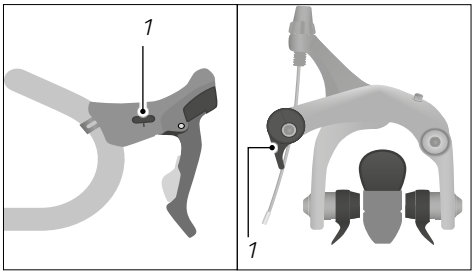

Illustr.: Quick-release lever position (example)

1 Quick-release lever

   - ➔ Check whether there is any brake pad grinding when the brake levers are released.
   - ➔ When operating the brake levers, check whether they touch the handlebars. If necessary, have your dealer readjust the brakes or replace worn components.
3. Test the functionality of the gear shifting system.
   - ➔ Check that all the gears shift correctly and whether any unusual noises are produced in the process.
4. Compress and extend the suspension fork.
   - ➔ If you hear unusual noises or the suspension fork gives way without any resistance, have it checked by your dealer.
5. Check whether the quick-release axles or thru-axles, if applicable, are correctly fastened and adjusted (see the "Wheels and tyres / Fitting and removing the front/rear wheel" chapter).
6. Check whether the handlebars are aligned perpendicularly to the front wheel.
   - ➔ Adjust the handlebars if they are not perpendicular to the front wheel (see the "Basic adjustments / Handlebars and handlebar stems / Aligning the handlebars" chapter).
7. Test the functionality of the bell and lighting.
   - ➔ Check whether you hear a clear sound when you operate the bell.
   - ➔ Switch on the lighting and check whether the headlamp and rear lamp are lit (see the "Basic adjustments / Lighting" chapter). With dynamo-equipped cycles, turn the front wheel to do this.
   - ➔ Remove any impurities/dirt from the headlamp, reflectors and tail light.

2.2 Before the first ride

WARNING

Unexpected cycle behaviour due to incorrect operation.

Risk of accident and injury!

- Familiarise yourself with the cycle before riding it for the first time.

The cycle has been fully assembled and adjusted by your dealer, and is ready to ride. The following points must also be noted before your first ride:

- Familiarise yourself with the arrangement of the brake levers.
- If the brake levers for the front and rear brakes are arranged in a way that is unusual to you, have this changed by your dealer.
- Stay at low speeds while you get accustomed to the braking characteristics of your brake type (see the "Brake" chapter).
- With hydraulic brakes, operate both brake levers several times to centre the brake pads in the brake calliper.
- Make sure that the handlebars, seat post and grips are firmly attached.
- Keep off the road while you get accustomed to the handling characteristics of your cycle.
- Keep off the road while you practice using the gear shifting system until you can operate it without any loss of attention (see the "Derailleur shifting system" and "Hub shifting systems" chapters).
- Check that you can sit in a position which is comfortable on longer rides and allows you to reach all the components on the handlebars safely while riding (see the "Basics / Seating position" chapter).

3 Safety

3.1 General safety notes

DANGER

Lack of protective headgear.

Risk of injury!

- Wear a suitable helmet when riding.

WARNING

Incorrect operation of the cycle due to insufficient knowledge.

Risk of accident and injury!

- Familiarise yourself with the features of the cycle before operation and use.
- If you are unfamiliar with the arrangement of the brake levers for the front and rear brakes, familiarise yourself with it and adjust your riding accordingly at the beginning.

WARNING

Incorrect operation by children or people with insufficient knowledge or capabilities.

Risk of accident and injury!

- Do not allow the cycle to be used by people with reduced physical, sensory or mental capabilities or with a lack of experience and expertise.
- Do not allow children to play with the cycle. Do not allow cleaning or maintenance to be carried out by children or people with reduced physical, sensory or mental capabilities.
- Do not allow children to play with the packaging or small parts.

The following safety note is only applicable to these cycle categories:

WARNING

Component breakage due to improper use of the cycle.

Risk of accident and injury!

- Do not jump over ramps or mounds of earth with the cycle.
- Do not ride the cycle cross-country.
- Do not drive the vehicle over stairs, rocks or other steps with a height of more than 15 cm, e.g. high kerbs.

The following safety note is only applicable to these cycle categories:

WARNING

Component breakage due to improper use of the cycle.

Risk of accident and injury!

- Only use the cycle to tackle obstacles that your skill and experience allow.

WARNING

Improper additions or alterations to the cycle and incorrect accessories can cause the cycle to malfunction.

Risk of accident and injury!

- Do not make any changes or modifications to your vehicle or have your dealer make any changes to the vehicle that change the characteristics of the vehicle (e.g. ski runners, load carrying attachments, sidecars).
- Have child seats or child trailers fitted by your dealer only.
- Only have child seats or any type of trailer fitted after consulting your dealer and if permitted by the cycle category or specifications for your model.

WARNING

Longer braking distance and reduced traction due to slippery or dirty roads.

Risk of accident and injury!

- Adapt your riding style and speed to suit the weather and road conditions.

CAUTION

Lack of control over the cycle due to riding freehand.

Risk of accident and injury!

- Never ride the cycle freehand.

CAUTION

Pinching hazards on the cycle.

Risk of accident and injury!

- Ensure that items of clothing cannot become entangled. Wear suitable clothing.

CAUTION

Slipping due to improper footwear.

Risk of accident and injury!

- Wear non-slip shoes with hard soles.

CAUTION

Inadequate protective clothing.

Risk of injury!

- Wear appropriate protective clothing (e.g. protectors and gloves) depending on your cycle category and its intended use.

CAUTION

The braking effect will diminish due to soap residues, oil, grease or care products on the rims or brake pads or on the brake discs or brake linings.

Risk of accident and injury!

- Avoid the contact of grease and oil with the rim or the brake disc as well as the brake pads or the brake linings.
- Do not use the vehicle if grease or oil has gotten onto the rim, brake disc, brake pads or brake linings, and have the compo-nents that are soiled with oil professionally cleaned and if nec-

essary replaced by your dealer.

- After cleaning, remove soap and care product residues.
- After cleaning, check the brakes for soap and care product residues.

NOTE

Neon colours can lose their colouring power under prolonged exposure to solar radiation.

Risk of damage!

- Do not expose your vehicle to direct sunlight for unnecessarily long periods of time and, if possible, place your vehicle in a location protected from the sun.

NOTE

Increased wear due to operating the cycle incorrectly.

Risk of damage!

- Use your cycle as described in the section on proper use.
- Refer to the notes on use that are relevant to your cycle category.
- Do not overload your cycle. Only tackle terrain or roads that are appropriate for your cycle category.

3.2 Notes on road use

DANGER

Poor visibility to other road users.

Risk of accident and injury!

- Wear light-coloured clothing with reflective elements when riding.

WARNING

Incorrect or improper use.

Risk of accident and injury!

- Refer to and follow national and regional road regulations.
- Only use the cycle on the road if its equipment meets national and regional road regulations.
- Note what is proper use for your cycle category.

WARNING

Inattention on the road.

Risk of accident and injury!

- Do not get distracted by other activities while riding, e.g. switching on lights.
- Do not use mobile devices such as smartphones or MP3 players while riding.
- Do not use drink bottles while riding.
- Do not ride the cycle if you have consumed alcohol, intoxicants, or medication that could affect your riding.

- Acquaint yourself with national and regional equipment regulations before your first ride. For example:
  - Compulsory helmet use
  - Compulsory use of reflective safety vests
  - Brakes
  - Lighting and reflectors
  - Bell
  - Trailers, child trailers and child seats
- Only use child trailers if your cycle is suitable for child trailer use (see the “Safety / Notes on carrying children / Child trailer” chapter).
- Only use child seats if your cycle is suitable for child seat use (see the “Safety / Notes on carrying children / Child seat” chapter).
- Refer to and follow national and regional road regulations.
  - Refer to and follow the traffic code.
- Contact your dealer if you have any questions.

Laws and regulations can change at any time. Regularly acquaint yourself with national and regional regulations.

3.3 Notes on carrying children

DANGER

Component breakage due to overloading the cycle.

Risk of accident and injury!

- Observe the maximum gross weight limit for the cycle.
- Do not mount any other seating except approved child seats or child trailers.
- Have a child seat or child trailer fitted by your dealer.

WARNING

Lack of protective headgear.

Risk of injury!

- Always have your child wear a suitable fitted helmet.
- Have your dealer explain what helmets are suitable for your child.
- Have your dealer show you how to use your child's helmet.

CAUTION

Risk of burning due to hot brake discs.

Risk of injury!

- Do not allow your child to play near the cycle.

CAUTION

Injury to your child due to the cycle falling over.

Risk of injury!

- When parking, always hold the cycle firmly while your child is sitting in the child seat or while they are near the cycle.
- Do not allow your child to play unsupervised near the parked cycle.
- Never leave your child sitting in the child seat or child trailer when you park the cycle on the kickstand.

NOTE

Material damage due to overloading the cycle.

Risk of damage!

➔ Observe the maximum gross weight limit for the cycle.

The use of child seats, child trailers and other bicycle trailers (load and dog trailers) is not permitted for vehicles in vehicle categories 0 and 6.

If a child seat or a trailer is used with a vehicle of category 2, 3, 4 or 5, the driver must comply with the intended use of category 2. The specified instructions for use remain valid for category 1.

The use of child seats, child trailers and other bicycle trailers is not permitted for:

- Vehicles with a carbon rear triangle, unless it has a special mount for securing the trailer hitch
- Vehicles of the type S-Pedelec
- Bicycles for children and young people with the wheel sizes 12", 16", 20" and 24".

The following points must be noted before carrying children:

➔ Only carry a child in the child seat or child trailer if permitted to do so by national and regional regulations.

➔ Refer to and follow national and regional regulations on the use of child seats and child trailers.

➔ Ask a dealer about suitable child seats and child trailers.

➔ Have child seats and child trailers fitted by your dealer only.

➔ Refer to and follow the information enclosed by the child seat or child trailer manufacturer.

➔ Observe the maximum weight limit for the child seat or child trailer, as stated in the accompanying user manual.

➔ Keep off the road while you get accustomed to the altered handling and braking behaviour of your cycle with a child seat or child trailer.

➔ Adapt your riding style to suit the altered handling characteristics.

➔ Practice with your child how to behave while riding.

➔ Only carry a child in the child seat or child trailer if they are wearing a fitted helmet. Consult a dealer about choosing a suitable helmet.

3.3.1 Child seat

CAUTION

Injury to your child due to inadequate safeguards.

Risk of injury!

- When fitting a child seat, have the saddle springs completely covered to avoid injury.
- When fitting a child seat, have all revolving and moving parts covered, e.g. with a spoke protector.

NOTE

Damage to cycle components due to fitting a child seat where this is not permitted.

Risk of damage!

- Never fit a child seat to the handlebars.
- Never fit a child seat to the seat post.
- Never fit a child seat to a front luggage carrier.
- Never fit a child seat to a carbon frame.

A child seat is a system for carrying small children on the cycle (see "Illustr.: Child seat").

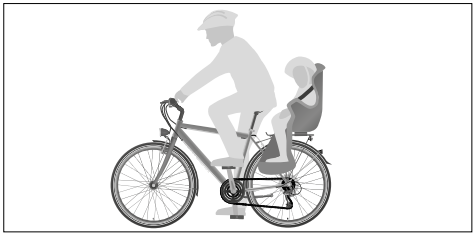

Illustr.: Child seat (example)

The following points must be noted when using a child seat:

- Only have child seats fitted if your cycle is suitable for this (see the "Basics / Proper use" chapter). Consult your dealer about suitable child seats.
- Only use child seats which are installed so that the child sits behind the rider.

From a design perspective, not all cycles are able to have child seats fitted. The user and fitting instructions provided by the child seat manufacturer must be followed. With full-suspension frames, the suspension system tuning must be checked. Consult your dealer.

Child seats may also be fitted to the luggage carrier if a suitable system/adapter for the luggage carrier is used that has been purchased from a dealer.

Child seats may not be fitted to a front luggage carrier.

3.3.2 Child trailer

A child trailer is a system for carrying small children. Child trailers are hitched behind the cycle (see "Illustr.: Child trailer").

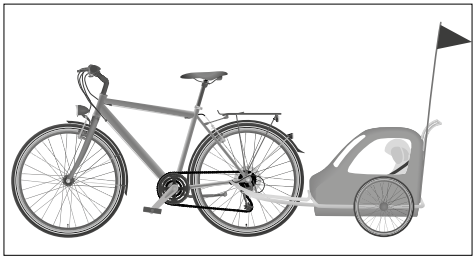

Illustr.: Child trailer (example)

The following points must be noted when using a child trailer:

- Only have child trailers fitted if your cycle is suitable for this (see the "Basics / Proper use" chapter). Consult your dealer about suitable child trailers.
- Observe the maximum trailer load limit.
- If nothing to the contrary is indicated on the cycle:
  - The maximum trailer load limit for an unbraked child trailer is 40 kg/88 lbs.
  - The maximum trailer load limit for a braked child trailer is 80 kg/176 lbs.
  - Preference must be given to any information on the cycle that is not consistent with these limits.
- Note that a child trailer makes your cycle significantly longer.
- Only carry the approved number of children for your child trailer.
- Only use child trailers with functional lighting that meets national and regional regulations.
- Choose a child trailer with a restraint feature.

- Have the child trailer fitted with a flexible flagpole (at least 1.5 m/4.9 ft high) and a fluorescent pennant, as well as covers for the spokes and wheel wells.

From a design perspective, not all cycles are able to have trailer couplings fitted. Consult your dealer.

3.4 Notes on transportation

3.4.1 Notes on luggage

WARNING

Falling due to incorrectly transported luggage.

Risk of accident and injury!

- Do not transport any shopping bags or other objects on the handlebars, with the exception of any system approved by the manufacturer of the cycle.
- Secure items on the luggage carrier to prevent them slipping and falling off. Only use undamaged bungee cords to secure luggage.
- Use sturdy panniers or suitable accessories for your luggage system carrier.

WARNING

Altered handling characteristics due to additional weight.

Risk of accident and injury!

- Keep off the road while you familiarise yourself with the handling characteristics when carrying additional luggage.
- Check the weight distribution of your luggage.
- Distribute additional weight centrally on the luggage carrier or equally on both sides.

- If you realise that you have no guarantee of being able to ride safely, reduce your luggage.
- Adapt your riding style to suit the altered handling characteristics.

The following points must be noted when transporting luggage:

- Position your luggage so as not to obscure reflectors or lamps.
- Brake earlier and plan for a longer braking distance as well as more sluggish steering behaviour.
- Secure luggage on the luggage carrier, e.g. with bungee cords, to prevent it slipping and falling off.
- Stow heavy items so that the bulk of the weight is close to the wheel hubs, e.g. in the bottom of panniers.
- Ensure that fasteners such as cords or rope cannot become entangled in moving parts.

3.4.2 Notes on fitting trailers

WARNING

Component breakage due to fitting the trailer coupling incorrectly.

Risk of accident and injury!

- Have trailer couplings fitted by your dealer.

- Only have trailers fitted which are fastened to the rear axle of the cycle via a trailer coupling.

This does not apply to models that have a mount integrated into the frame for mounting a trailer coupling.

- Do not under any circumstances have the trailer coupling fastened to other parts of the frame or components such as the seat post.

3.4.3 Notes on cargo and dog trailers

NOTE

Incorrect use of cargo and dog trailers.

Risk of damage!

- Never exceed the maximum trailer load limit.
- Secure loads and items in the trailer to prevent them slipping and falling off.
- Only carry dogs in suitable dog trailers. Do not use a cargo or child trailer.

Cargo and dog trailers are systems for transporting luggage and other items, and for carrying dogs. Cargo and dog trailers are hitched behind the cycle.

The following points must be noted when using cargo and dog trailers:

- Only have trailers fitted if your cycle is suitable for this (see the "Basics / Proper use" chapter). Consult your dealer about suitable trailers.
- Observe the maximum trailer load limit:
- If nothing to the contrary is indicated on the cycle:
  - The maximum trailer load limit for an unbraked trailer is 40 kg/88 lbs.
  - The maximum trailer load limit for a braked trailer is 80 kg/176 lbs.
  - Preference must be given to any information on the cycle that is not consistent with these limits.
- Note that a trailer makes your cycle significantly longer.
- Only use trailers with functional lighting that meets national and regional regulations.

From a design perspective, not all cycles are able to have trailer couplings fitted. Consult your dealer.

3.4.4 Notes on transporting the cycle by car

DANGER

Endangerment of other road users due to incorrectly fastened cycles.

Risk of accident and injury!

- If you transport your cycle using a fastening system for the roof or rear of the car, check the cycle fastening regularly during driving breaks to prevent it coming loose.

CAUTION

Unsecured transportation of cycles and small parts.

Risk of accident and injury!

- Never transport an unsecured cycle or unsecured cycle parts inside your car or in the boot (trunk).
- Fix the cycle in place with suitable interior fastening systems if you transport the cycle in the boot or inside your car.

NOTE

Incorrect use of bike carriers.

Risk of damage!

- Only use approved bike carriers that allow the cycle to be transported upright.
- Consult a dealer about a suitable carrier system.
- Cycles with hydraulic disc or rim brakes must never be transported upside down on their saddles. This may cause the hydraulic disc or rim brakes to fail.
- Secure the cycle so that it cannot slip or fall off.

Dealers offer a variety of carrier systems for transporting the cycle by car.

- Consult your dealer about suitable carrier and fastening systems.
- Refer to and follow national and regional road regulations.
- Refer to the information enclosed by the manufacturer about fitting and use.
- In the case of carbon-component cycles, note that these components can be damaged by clamping forces. Only use dedicated fastening systems.
- Please note that, for cycles with carbon frames, if the seat post is removed, the gripper clamp on the seat tube opening may not be closed.
- If the seat post is removed, secure the gripper clamp on the seat tube opening to prevent it from being lost.
- Note the change in the height of your car when using a roof carrier system. Measure the exact height before driving off.
- Fit the transport locks on disc brakes when you transport the cycle without wheels.
- When transporting pedelecs or S-pedelecs, follow the instructions in the original operating manual for the drive system.

3.5 Notes on torques

WARNING

Material fatigue due to tightening screw joints incorrectly.

Risk of accident and injury!

- Do not use the cycle if you find loose screw joints.
- Screw joints must be properly tightened with a torque wrench.
- Screw joints must be tightened using the correct torques.
- If two different torques are indicated for two connected components which affect the same point of connection, always observe the lower of the two values.

To correctly tighten the screw joints, the applicable torques must be observed. This requires a torque wrench with an appropriate adjustment range.

- If you have no experience with using torque wrenches or do not own a suitable torque wrench, have the screw joints checked by your dealer.

The correct torque for a screw joint is dependent on the material and diameter of the screw, as well as the material and design of the component.

- If you tighten screw joints yourself, check whether your cycle is equipped with aluminium or carbon components (see the specifications data sheet provided by the dealer).
  - Observe the specific torques for aluminium or carbon components.
- Individual components on the cycle are labelled with torque specifications or insertion depth markings. It is essential that you follow these specifications and markings. If two different torques are indicated for two connected components, always observe the lower of the two values. Also read the operating instructions for the components, if applicable.

Not all components are listed in the following table. The torque specifications are basic values and do not apply to carbon components.

You can find torque specifications that are tuned to the additional components can be found on the components. Also read the instructions delivered with the components, if applicable. Ask your dealer about any missing torque specifications.

The following torque specifications can usually be found as specifications on the components or in the accompanying component instructions.

Screw joint	Type	Torque
Handlebars / Stem	–––	5–6 Nm
Shift lever / Handlebars	(Gripper clamp)	4–5 Nm
Brake arm / Handlebars	(Gripper clamp)	4–6 Nm
Stem, angle adjustment	–––	15–18 Nm
Stem, fork stem	Quill-type (internal clamping mechanism)	8–15 Nm
	A-head (external clamping mechanism)	6–10 Nm
Stem, stem clamp	A-head	4 Nm
Saddle / Seat post	(Clamping connection with cylinder head screws)	13–15 Nm
Seat post / Screw-clamp ring	–––	8–10 Nm
Pedal / Crank	(Flat spanner wrench)	35–55 Nm
Front wheel axle / Front fork & rear wheel axle / Frame	Hub dynamo (Hub) Cotter pin nut	20–25 Nm
	Front wheel/rear wheel hub axle with cap nut	20–30 Nm

When you loosen screw joints and tighten them, or when you tighten screw joints that have become loose, always leave the screw joints as they were delivered. Some are dry; others are greased. Never grease screw joints that were delivered dry.

➔ If you lack the necessary expertise and the tools required, have your dealer check the screw joints.

3.6 Notes on screw turning directions

NOTE

Material damage due to handling screw joints incorrectly.

Risk of damage!

- Observe the turning direction of screws, thru-axles and nuts.

- Tighten screws, thru-axles and nuts by turning them clockwise.
- Loosen screws, thru-axles and nuts by turning them anticlockwise.

In the event of any deviation from this rule, the change in turning direction will be indicated in the respective chapter. Refer to the relevant notes.

3.7 Notes on wear

WARNING

Malfunction due to excessive wear, material fatigue or loose screw joints.

Risk of accident and injury!

- Check your cycle regularly.
- Do not use the cycle if you find excessive wear or loose screw joints.
- Do not use the cycle if you find any cracks, deformation or discolouration.
- Have the cycle checked by your dealer if you find excessive wear or loose screw joints.

Some cycle components are consumable parts. Heavy stress and incorrect use will increase and/or speed up wear. Different materials have distinct wear characteristics.

- ➔ Consult your dealer about cycle components that are subject to wear.
- ➔ Regularly check the condition of all consumable parts (see the “Before setting off / Before every ride” and “Maintenance” chapters).
- ➔ Clean and maintain consumable parts regularly (see the “Cleaning” and “Maintenance” chapters).
- ➔ The following consumable parts are subject to wear in the course of proper use, and are not covered against operational wear under the guarantee:

- Wheels (rims, spokes, hubs)
- Rims in conjunction with a rim brake
- Tyres
- Chainrings, sprockets, bottom bracket and rear derailleur rollers
- Shift and brake cables
- Shift and brake cable casings
- Brake pads and brake discs
- Various other brake components
- Handlebar tapes and handlebar grips
- Chains and drive belts
- Hydraulic fluids and lubricants
- Suspension element seals
- Lamps
- Paintwork
- Saddle
- Aluminium handlebars

3.8 Notes on carbon components

WARNING

Material failure due to invisible cracks after a fall.

Risk of accident and injury!

- Have carbon components checked by your dealer after overloading or a fall, even if they are not visibly damaged.
- Have carbon components checked by your dealer at regular intervals, even if they have not been overloaded.
- Do not use your cycle if you suspect it is damaged.

NOTE

Invisible cracks or breaks in the carbon frame.

Risk of damage!

- Never retrofit a carbon frame with a kickstand.

NOTE

Invisible cracks or breaks in carbon components.

Risk of damage!

- Avoid falls and severe impacts so as not to overload carbon components.
- Never attempt to repair or straighten carbon components yourself.
- Have carbon components checked by your dealer after overloading.

Carbon components require specific handling and care. The following points must be noted during maintenance, transportation or storage:

- Refer to and follow the information enclosed by the manufacturer.
- Use a torque wrench to make the correct torque adjustments.
- Never lubricate carbon components with conventional grease. Use dedicated fitting lubricants for carbon components.
- Never expose carbon components to temperatures above 45 °C/113 °F.
- To avoid damage from falls, park your cycle carefully and in a way that prevents it falling over.
- Never clamp a carbon frame directly in a work stand. Fit a metal seat post and clamp this in the work stand.
- Never retrofit a carbon frame with a kickstand as this may result in damage to the frame.

3.8.1 Falls and accidents

Carbon components can be damaged by a fall or accident. Damage to carbon components is not always visible. Fibres or paint can peel off or be destroyed, and the components can lose strength.

- Have carbon components replaced by your dealer after a fall or accident.

3.8.2 Bike carriers

A bike carrier is a device for transporting cycles by car. There is a risk of crushing the carbon frame when clamping it in a bike carrier. This may result in material breakage during subsequent use. There are dedicated bike carriers specially designed for carbon bikes.

- Ask your dealer about suitable bike carriers.

3.8.3 Torques

Specific torques must be observed for screw joints in carbon components. Permitted torques can be found on the respective components. Excessively high torques may result in damage that is difficult to see. Components can break or change and cause falls.

When you loosen screw joints and tighten them, or when you tighten screw joints that have become loose, always leave the screw joints as they were delivered. Some are dry; others are greased. Never grease screw joints that were delivered dry.

- Refer to the fitting information enclosed by the manufacturer.
- If you lack the necessary expertise and the tools required, have your dealer check the screw joints.

3.9 Residual risks

Even if all safety notes and warnings are observed, using the cycle still entails unforeseeable risks such as:

- Incorrect behaviour by other road users
- Unforeseeable road conditions e.g. slipperiness due to black ice
- Component breakage or failure due to unforeseeable material defects or material fatigue

➔ Ride defensively, looking ahead and anticipating.

➔ Check the cycle for cracks, discolouration or damage before every ride.

➔ Test the functionality of safety-related components such as the brakes, lighting and bell before every ride.

➔ Have the cycle checked for damage by your dealer after a fall or accident.

4 Basic adjustments

This chapter contains information about basic adjustments to the cycle, and information about how to put the cycle into use.

4.1 Quick releases

NOTE

Material breakage due to handling components incorrectly.

Risk of damage!

- Only pull a quick release lever by hand. Never use tools or other implements to pull the lever.

A quick release is a clamping device that allows cycle components to be fitted, removed or adjusted quickly and without tools. An eccentric mechanism creates tension when the quick-release lever is pulled. Quick releases consist of two main elements: the quick-release lever and the quick-release adjusting nut.

Quick releases often have two additional springs and sometimes a separate pulley under the lever.

If no tension is created when the quick-release lever is operated, the quick release must be readjusted.

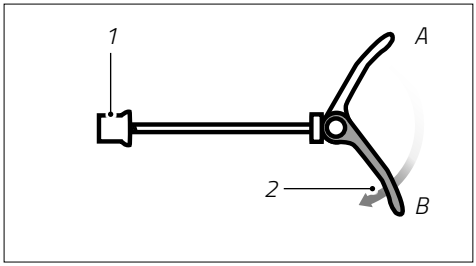

Illustr.: Quick release structure (example)

1 Quick-release adjusting nut

2 Quick-release lever

A Open quick-release lever

B Closed quick-release lever

- Screw the quick-release adjusting nut clockwise onto the axle until you notice that tension is created when you pull the quick-release lever.

4.2 Saddle

WARNING

Incorrect adjustment of the seat post.

Risk of accident and injury!

- Observe the minimum insertion depth for the seat post.
- If you lack the necessary expertise and the tools required to adjust the seat post, contact your dealer.

NOTE

Material breakage due to handling components incorrectly.

Risk of damage!

- Only pull a quick release lever by hand. Never use tools or other implements to pull the lever.
- Please note that, for cycles with carbon frames, if the seat post is removed, the gripper clamp on the seat tube opening may not be closed.
- Shortening the seat post is not permitted. This can cause the seat tube to break or crack.

- If the seat post is removed, secure the gripper clamp on the seat tube opening to prevent it from being lost.
- Have the saddle adjusted by your dealer so that you can sit in a comfortable position, easily operate all the components on the handlebars, and touch the ground with at least the tips of your toes.

4.2.1 Adjusting the saddle height

The cycle may be equipped with a rigid seat post or a telescopic seat post, depending on the model. Both types of seat post can be fastened using either a seat post clamp with a clamp bolt, or a quick-release seat post clamp. The seat post clamp allows the height of the saddle to be adjusted.

For some cycle models, it is not possible to completely lower the seat post into the seat tube. If the seat post hits an obstacle in the seat tube, pull the seat post upwards approximately 5 mm/0.2" from this point and fasten it there.

If you are unable to achieve an optimum seating position in this way, have a shorter seat post installed by your dealer if necessary.

Illustr.: optimum saddle height (example)

➔ For more information about telescopic seat posts, read the “Telescopic seat post” chapter.

If your cycle has a seat post clamp with a clamp bolt:

1. Hold the saddle firmly and loosen the clamp bolt by turning it anticlockwise until the seat post can be moved in the seat tube.
2. Pull the seat post out to the desired height.
   ➔ Follow the minimum insertion depth and minimum pull-out height specifications.
3. Tighten the clamp bolt by turning it clockwise to fasten the seat post clamp.
   ➔ Observe the permitted torque (see the “Safety / Notes on torques” chapter).
4. Check whether the saddle is correctly positioned. It must not twist.
   ➔ If you can twist the saddle, check the seat post clamp.

If your cycle has a seat post clamp with a quick release:

1. Hold the saddle firmly and pull the quick-release lever outwards.
2. Pull the seat post out to the desired height.
   ➔ Follow the minimum insertion depth and minimum pull-out height specifications.

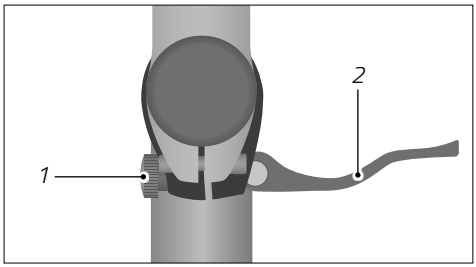

Illustr.: Quick release (example)

1 Adjustment screw

2 Quick-release lever

3. Fasten the seat post clamp by pulling the quick-release lever inwards until it touches the seat tube.
   - ➔ If you cannot pull the clamping lever by hand, then the preload is too high. Correct the preload by loosening the adjustment screw a little and pull the clamping lever again.
4. Check whether the saddle is correctly positioned. It must not twist.
   - ➔ If you can twist the saddle, the preload is too low. Correct the preload by tightening the adjustment screw a little.

4.2.2 Minimum insertion depth

Seat posts have a minimum insertion depth marked on their tubing, and must be inserted up to at least this point in the seat tube.

WARNING

Cracking or breakage to the seat tube due to shortening the seat post.

Risk of accident and injury!

- ➔ Observe the minimum insertion depth for the seat post.
- ➔ Never shorten the seat post.

- ➔ Observe the minimum insertion depth for the seat post. The marking on the seat post must not be visible (see "Illustr.: Seat post minimum insertion depth").
- ➔ Have the saddle height adjusted by your dealer.

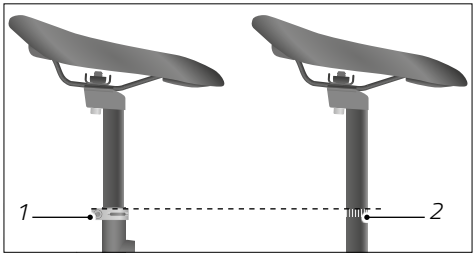

Illustr.: Seat post minimum insertion depth (example)

1 Seat post clamp

2 Minimum insertion depth marking

4.2.3 Adjusting the minimum pull-out height

The minimum pull-out height is the minimum height to which the seat post must be pulled out of the seat tube. This chapter applies to S-pedelecs and cycles with telescopic seat posts.

NOTE

Failure to observe the minimum pull-out height.

Risk of damage!

- Adjust the height of the saddle so as not to damage any cables or connecting wires inside the seat tube.
- For S-pedelecs, pull the seat post out until any parts of the lighting set (if present) and/or licence plate are not obscured.

If the cycle is equipped with a telescopic seat post:

- Refer to and follow information from the manufacturer.
- Have your dealer adjust the saddle height and give you instructions on operation.

4.2.4 Adjusting the saddle tilt

The saddle tilt must be adjusted to prevent your weight being supported on the handlebars. The optimum saddle position is horizontal.

1. Loosen the saddle clamp bolt(s) under the saddle.
2. Adjust the saddle tilt. Ensure that the tilt angle adjustment mechanism – if present – is correctly locked in place.
3. Tighten the saddle clamp bolt(s) by screwing clockwise, using the recommended torque.

- If you lack the necessary expertise and the tools required, have the saddle tilt adjusted by your dealer.

4.2.5 Adjusting the reach

The seating position must be adapted to suit the size of the rider. To do this, the distance between the saddle and handlebars can be increased or decreased by moving the saddle horizontally.

1. Loosen the saddle clamp bolt(s) under the saddle.
2. Adjust the reach. When doing so, observe the clamping range which is generally marked on the saddle rails.
   - ➔ To shorten the reach, push the saddle towards the handlebars.
   - ➔ To lengthen the reach, push the saddle towards the rear wheel.
3. Tighten the saddle clamp bolt(s) by screwing clockwise, using the recommended torque.

➔ If you lack the necessary expertise and the tools required, have the reach adjusted by your dealer.

4.3 Handlebars and handlebar stems

WARNING

Material breakage due to adjusting the handlebar height incorrectly.

Risk of accident and injury!

- ➔ Have the handlebars adjusted by your dealer.
- ➔ Do not make any adjustments to the handlebars if you lack the necessary expertise and the tools required.
- ➔ Observe the minimum insertion depth for the handlebar stem.

Handlebar stems connect the cycle handlebars to the front fork.

A rigid or adjustable handlebar stem may be fitted, depending on the cycle model. There is a distinction between handlebar stems with internal clamping mechanisms and handlebar stems which cover the fork stem and are clamped with bolts from outside.

Parameters for a handlebar stem include: Diameter of the fork stem, diameter of the handlebar clamping mechanism, length, angle and height.

Handlebar height is among the adjustments that must be made in adapting the cycle to suit the size of the rider.

➔ Have the handlebars adjusted by your dealer so that you can sit in a comfortable position and easily operate all the components on the handlebars.

4.3.1 Minimum insertion depth

Quill-type handlebar stems have a minimum insertion depth marked on their tubing, and must be inserted up to at least this point in the fork stem.

- Observe the minimum insertion depth for the handlebar stem. The marking on the handlebar stem or handlebar shaft must not be visible (see "Illustr.: Minimum insertion depth marking on a quill-type stem with an internal clamping mechanism").

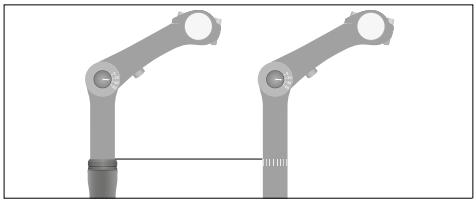

Illustr.: Minimum insertion depth marking on a quill-type stem with an internal clamping mechanism (example)

- Note that height adjustments to A-head handlebar stems, which cover the fork stem and are clamped with bolts from outside, require expertise. With this type of handlebar stem, the handlebar height is adjusted using spacing washers and limited by the fork stem length.
  - Have your dealer carry out the adjustment.

4.3.2 Adjusting the handlebar stem tilt

Depending on the cycle model, the cycle may be equipped with a handlebar stem that includes a tilt angle adjustment mechanism. The handlebar tilt must be adjusted so that your wrists and forearms are in line when riding.

- Carefully loosen the side screw until the splines release.
- Press the screw head with your thumb to loosen the handlebar stem.

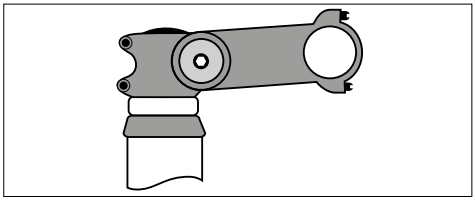

Illustr.: Side screw on the handlebar stem (example)

- Adjust the tilt of the movable handlebar stem to your liking.
- Press the loosened adjustment mechanism back into the handlebar stem until the pawl is correctly engaged with the splines.
- Tighten the screw by turning it clockwise, using the recommended torque.

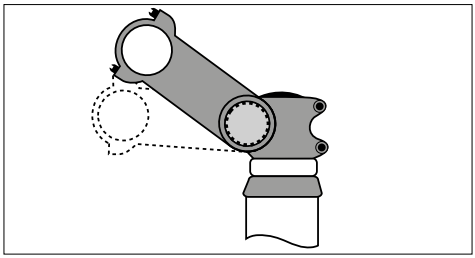

Illustr.: Tilt adjustment (example)

4.3.3 Aligning the handlebars

The handlebars must be at a 90° angle to the front wheel.

- Have the handlebars adjusted by your dealer if they are not perpendicular to the front wheel (see Illustr.: Correct handlebar alignment").

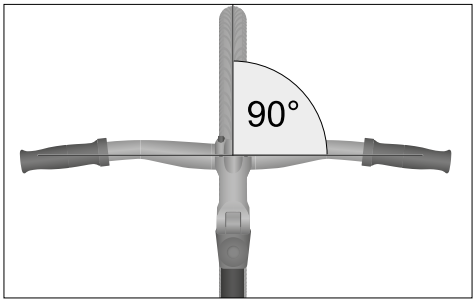

Illustr.: Correct handlebar alignment (example)

4.4 Controls

Controls (e.g. the bell, brake levers, gear shifting system, etc.) must be arranged so that they can be operated easily while riding, without distracting you from the road, and if possible without taking your hands off the handlebar grips.

- Have the controls adjusted by your dealer if you lack the necessary expertise or the tools required.

4.5 Brake lever

WARNING

Loss of brake power due to incorrectly adjusted brakes.

Risk of accident and injury!

- Have brake adjustments carried out by your dealer only.
- Do not make any adjustments to the brakes if you lack the necessary expertise or the tools required.

- Adjustments to the brake system are highly complex and require expertise. Have your dealer carry out the adjustment.

4.5.1 Check the arrangement of the brake lever

- Check the arrangement of the brake lever and accustom yourself to any different arrangement of the brake levers.

The brake levers are typically installed as follows for the bicycle/pedelec (exception possible in the UK):

- Right for rear
- Left for front
- In the case of just one hand brake (+coaster brake), right for front

The brake levers are typically installed as follows for the S-pedelec:

- Left for rear
- Right for front

4.5.2 Adjusting the position

The position of the brake levers must be custom-adjusted so that the levers can be operated easily and safely.

- Loosen the brake lever fastening by turning the brake lever screw anticlockwise (see "Illustr.: Brake lever position").
- Position the brake lever at a point where your fingers, wrist and arm are in line and your fingers are resting comfortably on the brake lever, and where you can pull the lever safely.
- Tighten the brake lever screw by turning it clockwise. Ensure that the torque is correct.

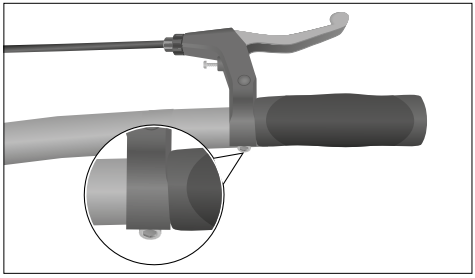

Illustr.: Brake lever position (example)

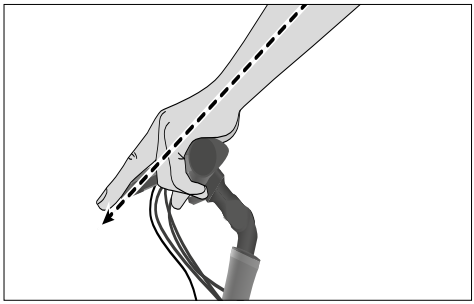

Illustr.: ergonomic hand position (example)

4.5.3 Adjusting the grip width

The grip width of the brake levers must be custom-adjusted so that the levers can be operated easily and safely. Mechanical and hydraulic brakes generally have an adjustment screw on the brake lever (see "Illustr.: Adjustment screw position"). Turning the adjustment screw alters the distance between the brake lever and the handlebar grip. The position of the adjustment screw may vary depending on the brake design.

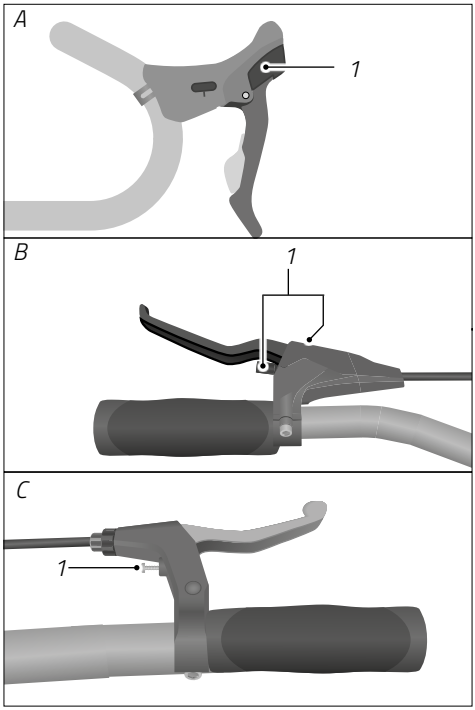

Illustr.: Adjustment screw position (example)

1 Grip width adjustment screw

1. If applicable, remove the protective cap from the adjustment screw.
2. Adjust the brake lever to the grip width of your hand by loosening or tightening the adjustment screw.
3. Check the minimum distance by operating the brake lever.
   - ➔ If the distance between the operated brake lever and the handlebar grip is less than 1 cm/0.4", adjust the cable tension or pressure point (see the "Brake / Adjustments / Adjusting the brake cable tension in mechanical brakes" chapter, or "Brake / Adjustments / Adjusting the pressure point" chapter).
4. If applicable, place the protective cap over the adjustment screw.

4.6 Pedals

The pedals are attached to the cranks. The cycle is powered by pedalling with your feet.

The cycle may be equipped with folding pedals, block pedals or clipless pedals, depending on the cycle model.

- When fitting pedals, note that the right pedal has a right-hand thread and the left pedal has a left-hand thread. In both cases, the pedal is tightened in the crank by screwing it in the direction of travel. Both pedals are loosened by unscrewing them counter to the direction of travel.

4.6.1 Folding pedal

CAUTION

Folding pedals in and out incorrectly.

Risk of injury!

- Ensure that you do not get your fingers caught in the folding mechanism.
- Wear protective gloves if necessary.

A folding pedal is a pedal with a folding mechanism. When storing or transporting the cycle, the pedals can be folded in so that they sit close up against the cycle.

- Familiarise yourself with the folding system before using it for the first time.
- Refer to and follow the information enclosed by the manufacturer about using folding pedals.
- Have your dealer explain the folding mechanism to you if necessary.

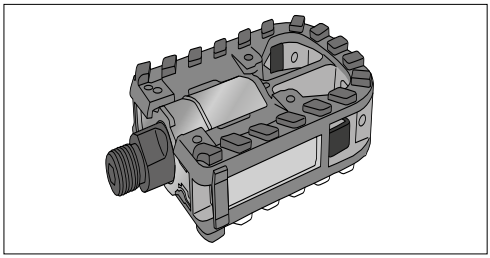

Illustr.: Folding pedal folded out (example)

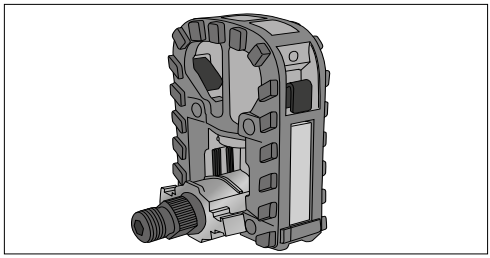

Illustr.: Folding pedal folded in (example)

4.6.2 Block pedal

A block pedal is the traditional pedal variant (see “Illustr.: Block pedal”).

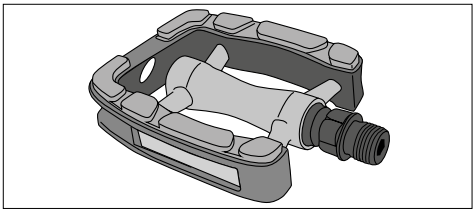

Illustr.: Block pedal (example)

4.6.3 Clipless pedal

WARNING

Falling due to not disengaging shoes from the clipless system in time.

Risk of accident and injury!

- Disengage your shoes from the pedals’ clipless system in good time before stopping.
- Keep off the road while you practice engaging and disengaging your shoes from the clipless system.

A clipless pedal has a device that allows specially designed shoes to be locked in place (see “Illustr.: Clipless pedal”). Engaging your shoes in the clipless system keeps your feet firmly connected with the pedals, providing better grip and stability.

- Familiarise yourself with the clipless system before using it for the first time.
- Adjust the release force and the cleats before the first use.
- If you lack the necessary expertise to adjust the pedals, contact your dealer.

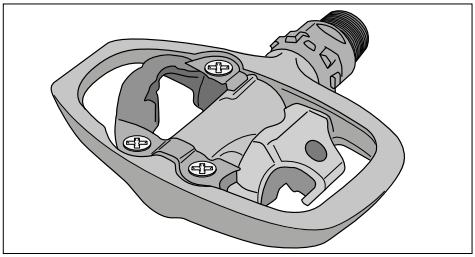

Illustr.: Clipless pedal (example)

4.6.4 Foot clearance

WARNING

Risk of falling due to insufficient foot clearance.

Risk of accident and injury!

- Ensure there is adequate foot clearance, depending on the foot anchoring system.
- Have the foot anchoring system fitted by a dealer.

With racing bikes, the distance between the pedal and the front wheel must not fall below a certain foot clearance value. The distance is measured parallel to the longitudinal axis of the cycle, from the midpoint of the pedals to the arc of the front wheel at full steering lock (see "Illustr.: Distance between the pedal and front wheel").

Foot clearance on racing bikes	
without a foot anchoring system*	100 mm/3.9"
with a foot anchoring system*	89 mm/3.5"
* Foot anchoring systems: e.g. clipless pedals or toe clips	

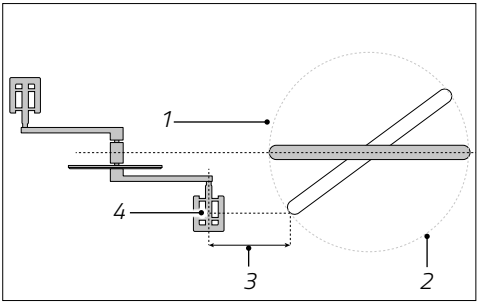

Illustr.: Distance between the pedal and front wheel (example)

1 *Front wheel*
2 *Arc of the front wheel at full steering lock*
3 *Foot clearance = distance between the pedal and front wheel*
4 *Pedal midpoint*

4.7 Lighting

DANGER

Poor visibility to other road users.

Risk of accident and injury!

- Switch on lighting in poor visual conditions and in the dark.

WARNING

Inattention on the road due to switching on lighting.

Risk of accident and injury!

- Do not switch on lighting while riding. Always stop to switch on the lighting.

WARNING

Certain standard pre-assembled lighting devices can develop a good deal of heat, especially when stationary, and cause burns if touched.

Risk of injury!

- Do not touch the lighting during or shortly after operation to avoid burns.

In order to ride on the road, lighting and reflectors must meet national and regional regulations.

- Refer to and follow national and regional regulations on lighting equipment.
  - Acquaint yourself with these before your first ride. Retrofit your cycle to meet the regulations if necessary. Contact your dealer about this.

Lighting consists of a headlamp, rear lamp and reflectors, and ensures better visibility in poor visual conditions and at night.

The cycle may be equipped with hub dynamo fixed lighting or battery-powered clip-on lighting, depending on the cycle model.

4.7.1 Hub dynamo

The hub dynamo, to which the headlamp is connected, is located in the front wheel hub. The rear lamp is linked to the headlamp. The hub dynamo supplies the lighting with power as soon as the front wheel is turned.

With a hub dynamo, the lighting is generally switched on directly from the headlamp or from the handlebars. When the switch is operated, the rear lamp is switched on along with the headlamp.

- Switch the lighting on and off by operating the switch.

Depending on the lighting model, there may be an integrated light sensor. In automatic mode, the headlamp and rear lamp are switched on and off automatically depending on the light conditions.

- Adjust to automatic mode to switch on the light sensor.

Depending on the lighting model, the rear lamp on your cycle may have a standing light feature which allows the rear lamp to remain lit for several minutes even when you stop riding. This feature does not need to be switched on separately.

There are various types of headlamp with different switch options. Have your dealer explain how they are operated and how they function.

4.7.2 Battery-powered and rechargeable lighting

Depending on the lighting model, the headlamp and rear lamp may be equipped with different switches and need to be operated independently of each other.

- Switch the lighting on and off by operating the relevant switch.
- Refer to the information enclosed by the manufacturer about operating and fitting battery-powered and rechargeable lighting.

4.7.3 Headlamp

1. Switch on the headlamp.
2. Adjust the headlamp so that, at a distance of 5 m/16.4 ft in front of the headlamp, the light beam reaches a point only half as high as at its starting point (see "Illustr.: Adjusting the headlamp").
   - ➔ An incorrectly adjusted headlamp can dazzle other road users.

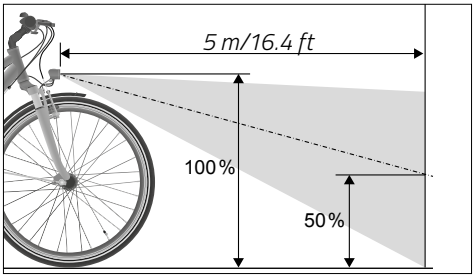

Illustr.: Adjusting the headlamp (example)

4.7.4 Rear lamp

A rear lamp must be installed in an easily visible location at the back of the cycle.

- ➔ Check that the rear lamp is functional and unobscured before riding off.

4.7.5 Reflectors

Reflectors must be installed in an easily visible location on the cycle and must not be obscured. Generally, reflectors are located on the pedals, the tyres, the rear lamp and the headlamp.

- ➔ Check that all reflectors are undamaged and visible before riding off.

4.8 Suspension

This chapter contains information for the following cycle categories:

WARNING

Loss of traction due to incorrectly adjusted suspension.

Risk of accident and injury!

- ➔ Have the suspension adjusted by your dealer.
- ➔ Have your dealer explain how your suspension is operated and adjusted.

NOTE

Impact noises due to incorrectly adjusted suspension.

Risk of damage!

- If you feel hard impacts or hear unusual noises upon compression, have the suspension checked by your dealer.

Suspension reduces the forces acting on the rider when the road is uneven.

On bumpy ground, cycles with tuned suspension are more efficient and more comfortable to ride.

- Refer to and follow the information enclosed by the manufacturer about features and adjustments for your suspension.

5 Brake

5.1 Basics

The cycle is equipped with at least two independent brakes. Depending on the cycle model, the following brakes may be installed:

- Coaster brake
- Rim brake
- Disc brake

5.1.1 Coaster brake

Cycles with hub shifting systems and cycles without gear shifting systems are frequently equipped with a coaster brake. This is integrated in the cycle's rear wheel hub and operated using the pedals (see "Illustr.: Coaster brake").

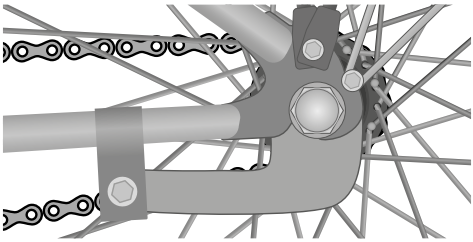

Illustr.: Coaster brake (example)

5.1.2 Brake lever

The brakes are operated using the brake levers. Force is transmitted mechanically or hydraulically. In the case of a mechanical design, the force from the brake lever is transmitted to the brake via a cable. In the case of a hydraulic design, the force from the brake lever is transmitted to the brake via brake lines which contain brake fluid.

If the cycle is equipped with just one brake lever, this operates the front brake. The rear brake is the coaster brake.

If the cycle is equipped with two brake levers, the left-hand brake lever is generally for the front brake while the right-hand brake lever is for the rear brake (see "Illustr.: Brake lever arrangement").

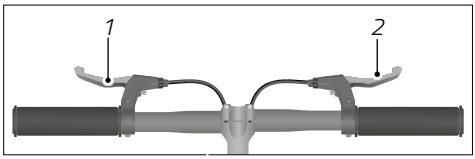

Illustr.: Brake lever arrangement (example)

1 Front brake lever

2 Rear brake lever

➔ Note that the arrangement of the brake levers may vary. Familiarise yourself with the brake lever arrangement before setting off. Contact your dealer if you would like to have the brake lever arrangement changed.

5.1.2.1 Disc brake

The brake discs are fastened to the wheel hubs, with the corresponding brake calliper fastened to the frame or front fork (see "Illustr.: Disc brake"). The brake pads are located inside the brake calliper. When the brake lever is operated, the brake pads are pressed against the brake disc and brake the wheel.

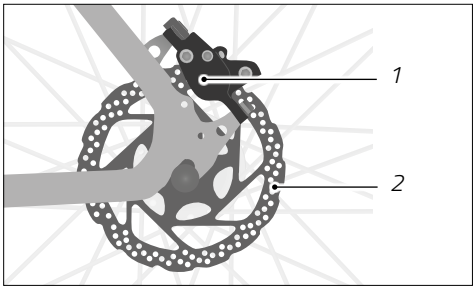

Illustr.: Disc brake (example)

1 Brake calliper

2 Brake disc

5.1.2.2 Rim brake

Rim brakes are fastened to the front fork or rear frame. When operated, the brake block holders are pressed against the braking surface of the rim sidewall to brake the wheel (see "Illustr.: Mechanical rim brakes" and "Illustr.: Hydraulic rim brake").

Depending on the brake design, mechanical rim brakes may be equipped with a brake force modulator. The brake force modulator partially regulates the brake lever force at the front and prevents the front wheel locking up. The brake force modulator is installed between the brake lever and rim brake.

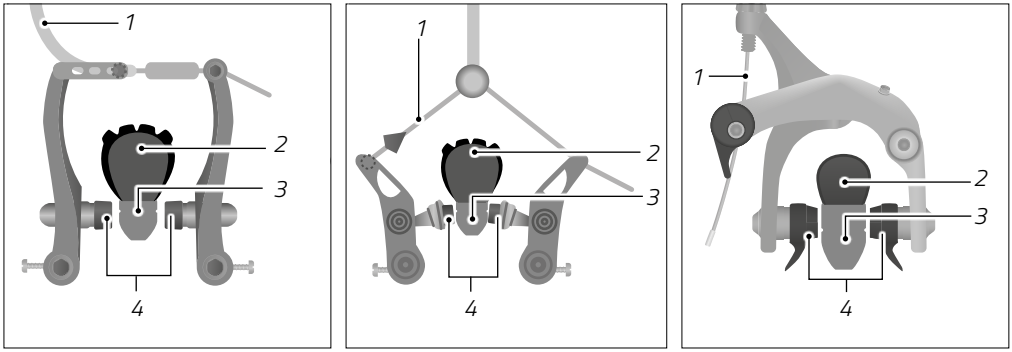

Illustr.: Mechanical rim brakes (example)

1 Cable

2 Tyre

3 Rim

4 Brake block holders

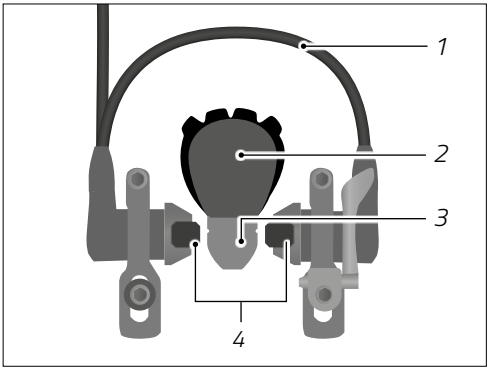

Illustr.: Hydraulic rim brake (example)

1 Brake line

2 Tyre

3 Rim

4 Brake block holders

5.2 Operation

WARNING

Risk of overturning due to pulling the front brake.

Risk of accident and injury!

- Use the front brake lever carefully at high speeds to prevent overturning.
- Always brake using both brakes simultaneously for optimum brake power.
- Adapt the braking force from the brakes to suit the riding situation, road conditions and weather so that you avoid locking up the wheels.
- Use the rear brake carefully when cornering to prevent the rear wheel locking up.

WARNING

Longer braking distance due to reduced brake power in the wet.

Risk of accident and injury!

- Adapt your riding style and speed to suit the weather and road conditions.

5.2.1 Operating the brake lever

- To operate a brake lever, pull it towards the handlebar grip with your fingers.

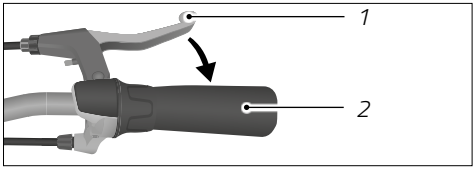

Illustr.: Operating the brake lever (example)

1 Brake lever

2 Handlebar grip

5.2.2 Operating the coaster brake

WARNING

No coaster brake action where the chain has dropped off the chainring.

Risk of accident and injury!

- If the coaster brake has no effect, brake carefully using the front brake lever and also the rear brake lever if applicable.

The coaster brake only functions when riding forwards. The coaster brake is operated most effectively if the pedals are in a horizontal position with the downward force acting on the rear pedal. Operate the brake levers when rolling backwards.

The coaster brake is operated by back-pedalling, and brakes the rear wheel (see "Illustr.: Operating the coaster brake").

- Ensure that the crankset is functional, as the braking force is transmitted via the chain.
- To operate the coaster brake, pedal counter to the direction of travel.

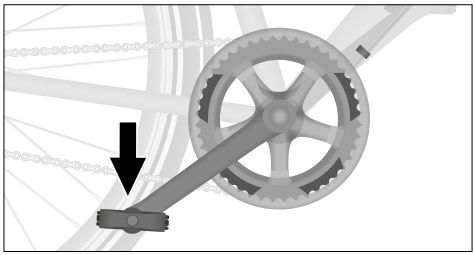

Illustr.: Operating the coaster brake (example)

5.3 Bedding in disc brakes

New brakes must be bedded in before they can reach their full brake power.

- Keep off the road while bedding in the brakes.
- Brake in a controlled manner to prevent the wheels locking up.
- Operate both brake levers simultaneously.
- Bedding in consists of around 30 short periods of braking. Brake from around 25 km/h/15.5 mph down to a stop. The bedding-in process is complete when a consistent brake action is produced upon steadily operating the brake lever.

5.4 Maintaining braking force

Diminished brake action in disc brakes due to the brake system overheating is known as "fading". When the temperature at the point of contact between the brake pads and brake disc rises, e.g. due to continuous braking, the brake power drops.

- Avoid long periods of continuous braking.
- Allow the brake pads to cool down regularly.
- Do not use the cycle if the brake power is reduced due to warming.
- Only use the cycle again once full brake power is restored.

5.5 ABS system

It is possible that an ABS system is installed on your vehicle.

The ABS system works in such a way that when the brakes are applied, sensors on the front wheel detect the critical tightening pressure, limit it and thus stabilise the vehicle. Once the vehicle has been stabilised, the ABS system continuously builds up the application pressure of the brakes until the front wheel is brought back to the locking limit. If the front wheel locks again, the pressure is released again. The process is repeated to keep the front wheel at the limit of adhesion at all times, thus keeping the friction between the tyres and the road surface at an optimum level.

All further information on the ABS system can be found in the additional instructions supplied.

5.6 Adjustments

The grip width must be custom-adjusted so that the brake lever can be operated easily and safely (see the “Basic adjustments / Brake lever / Adjusting the grip width” chapter).

5.6.1 Adjusting the brake cable tension in mechanical brakes

WARNING

Loss of brake action due to worn brake pads and cables.

Risk of accident and injury!

- Replace worn brake pads and cables.
- If you lack the necessary expertise and the tools required to replace these, contact your dealer.

With mechanical brakes, minor brake pad wear is offset via the brake cable tension. Changing the brake cable tension alters the distance between the rim and the brake block holders. The position of the lock nut and knurled screw may vary depending on the cycle model.

1. Loosen the lock nut by giving it one turn anticlockwise.
2. To increase the cable tension, gradually turn the knurled screw anticlockwise until the distance between the brake block holders and the rim is 1–2 mm/0.04–0.08" on each side.
   - Ensure that the brake block holders meet the rim simultaneously on both sides.
   - Ensure that the wheel turns smoothly (see the “Wheels and tyres / Rims and spokes” chapter).

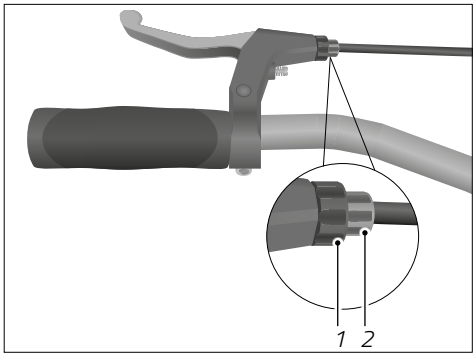

Illustr.: Lock nut and knurled screw position (example)

1 Lock nut

2 Knurled screw

3. Tighten the lock nut by turning it clockwise.
   - ➔ If the brake cannot be adjusted through the cable tension, have the brake adjusted by your dealer.

5.6.2 Adjusting the pressure point

With hydraulic brakes, minor break pad wear is offset via the pressure point adjustment screw (see "Illustr.: Adjustment screw position"). The adjustment screw is generally located on the brake lever. Brakes without an adjustment screw have the distance adjusted automatically.

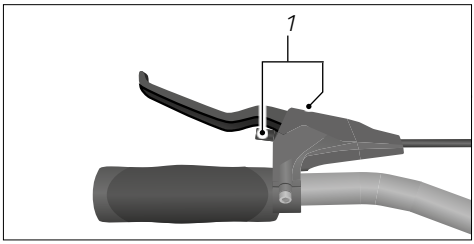

Illustr.: Adjustment screw position (example)

1 Pressure point adjustment screw

The distance between the rim and brake pad is increased or decreased depending on the turning direction.

- ➔ For rim brakes, gradually turn the adjustment screw until the distance between the rim and each brake pad is 1–2 mm/0.04–0.08".
  - ➔ Ensure that the brake block holders meet the rim simultaneously on both sides.
  - ➔ Ensure that the wheel turns smoothly (see the "Wheels and tyres / Rims and spokes" chapter).
- ➔ For disc brakes, gradually turn the adjustment screw until the desired pressure point is reached.

6 Derailleur shifting system

6.1 Basics

Usually all modern cycles have a gear shifting system installed; this depends on the cycle model. Exceptions include children's bikes, which may only have one gear depending on the model.

The gear shifting system on a cycle consists of a variable gear unit and the corresponding controls. As a result, the power provided by the rider is adapted to suit the riding speed and route conditions.

A derailleur shifting system consists of 1 to 3 chainrings on the crankset and 6 to 12 sprockets on the rear wheel (see "Illustr.: Components of a derailleur shifting system"). Separate controls on the right and in some cases the left-hand side of the handlebars are generally used to shift sprockets and chainrings (see the "Derailleur shifting system / Operation" chapter).

Adjustments to the gear shifting system require expertise.

- ➔ If you lack the necessary expertise and the tools required, contact your dealer.

6.1.1 Mechanical derailleur shifting system

- ➔ When shifting gear, pedal only gently.

The theoretical number of gears is determined with a "chainrings × sprockets" calculation (see the "Derailleur shifting system / Basics / Gear combinations" chapter).

The smaller the sprocket, the higher the selected gear and the lower the cadence.

The larger the sprocket, the lower the selected gear and the higher the cadence.

The smaller the chainring, the higher the cadence.

- ➔ Use a low gear on inclines.
- ➔ Use a high gear for higher speeds on flat routes.

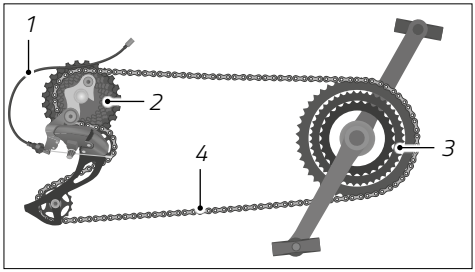

Illustr.: Components of a derailleur shifting system (example)

1 Shift cable

2 Cassette of several sprockets on the rear wheel

3 Chainrings on the crankset

4 Chain

6.1.2 Electronic derailleur shifting system

An electronic derailleur shifting system is powered by a rechargeable battery which provides electricity for the front and rear derailleurs. It functions the same way as a mechanical derailleur shifting system. The shifter buttons can be pressed in quick succession. The shifting system registers how many times they have been pressed, then moves the chain quickly and precisely. The shifting system automatically prevents an excessively crossed chain line.

The cycle, generally a racing bike or MTB, may have an electronic shifting system depending on the model.

Gears are shifted up or down by pressing the relevant shift lever. The electronics ensure that the gears are changed quickly.

- Contact your dealer for further information and if you have any questions, or refer to the manual enclosed with the electronic derailleur shifting system.

6.1.3 Gear combinations

NOTE

Incorrect use of gear combinations.

Risk of damage!

- Never combine the small chainring with the smallest sprockets or the large chainring with the largest sprockets.

With incorrect gear combinations, a crossed chain results in increased wear on the chainrings, sprockets and chain.

Proper use only allows for certain gear combinations (see "Illustr.: Gear combinations").

- Use the gear combinations in such a way that the chain runs parallel to the direction of travel.
- Use the smallest chainring on inclines and the largest chainring for higher speeds on flat routes.
- If you are unsure about operating the gear shifting system, have your dealer give you instructions.

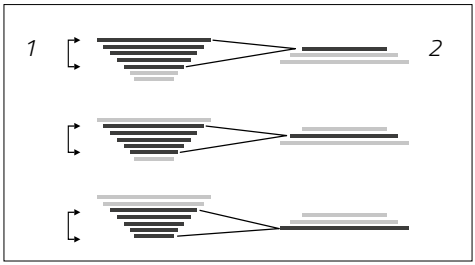

Illustr.: Gear combinations (example)

1 7 sprockets on the rear wheel

2 3 chainrings on the crankset

6.2 Operation

WARNING

Inattention on the road.

Risk of accident and injury!

- Familiarise yourself with the features of the gear shifting system before your first ride.
- Only operate the gear shifting system if it will not take any of your attention off the road.
- Stop if you cannot operate the gear shifting system safely, e.g. in the event of a malfunction.

NOTE

Increased wear and damage due to operating the gear shifting system incorrectly.

Risk of damage!

- Do not pedal hard when shifting gears.
- Do not back-pedal when shifting gears.
- Shift down in good time before inclines.
- Always start riding in a low gear (lower third of the available gears), e.g. at maximum gears 1-3 if 9 gears are available.

- If you are not familiar with gear shifting systems, have your dealer explain how the shifting system is operated.

6.2.1 Shifting sprockets

The arrangement of the shift levers (top or bottom of the handlebars) and their operation may vary depending on the model. The gear-shifting control for the sprocket cassette is located on the handlebars, to the right (see "Illustr.: Handlebar control for shifting sprockets and chainrings").

- To shift onto the next largest sprocket, press the lower shift lever.
  - Some models offer the possibility of shifting down multiple gears at once. To do this, press the shift lever further.
- To shift onto the next smallest sprocket, press the upper shift lever.
  - Some models offer the possibility of shifting up a gear by pulling the shift lever in the opposite direction with your index finger.
- Once operated, release the shift lever so that it can automatically return to its starting position.

If your cycle model is equipped with a twist-grip control:

- Twist-grip controls are generally marked with numbers for the individual gears. Turn the twist-grip control in the relevant direction to shift up or down.

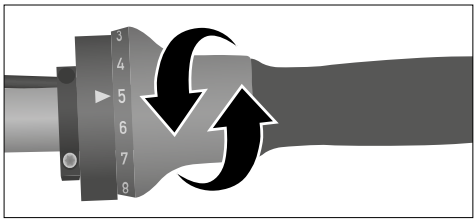

Illustr.: Twist-grip control (example)

6.2.2 Shifting chainrings

The arrangement of the shift levers (top or bottom of the handlebars) and their operation may vary depending on the model. The gear-shifting control for the sprocket cassette is located on the handlebars, to the left (see Illustr.: "Handlebar control for shifting sprockets and chainrings").

- To shift onto the next largest chainring, press the lower shift lever.
- To shift onto the next smallest chainring, pull the upper shift lever on the left-hand side of the handlebars.
- Once pressed, release the shift lever so that it can automatically return to its starting position.

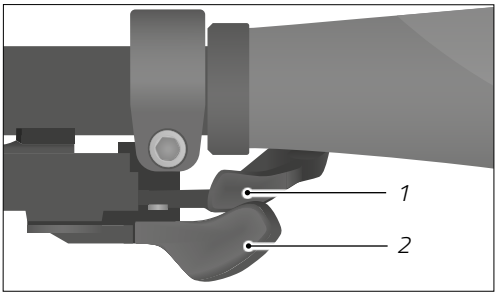

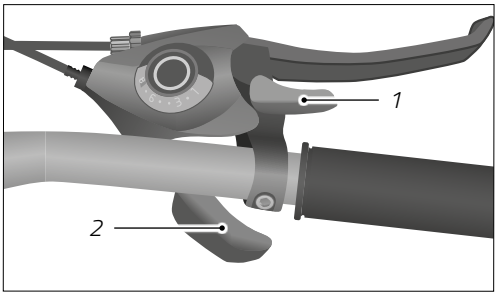

Illustr.: Handlebar control for shifting sprockets and chainrings (on the right-hand side of the handlebars here as an example)

1 Upper shift lever

2 Lower shift lever

If your cycle model is equipped with a twist-grip control:

- Twist-grip controls are generally marked with numbers for the individual gears. Turn the twist-grip control in the relevant direction to shift up or down (see "Illustr.: Twist-grip control").

6.2.3 Electronic derailleur shifting system

An electronic derailleur shifting system requires dedicated button controls on the handlebars. The shifter buttons can be pressed in quick succession. The shifting system registers how many times they have been pressed, then moves the chain quickly and precisely. The shifting system automatically prevents an excessively crossed chain line.

6.2.4 Derailleur/hub shifting system (Dual Drive)

- If your cycle is equipped with a combined derailleur/hub shifting system, read the "Hub shifting systems / Operation / Derailleur/hub shifting system (Dual Drive)" chapter as well.

6.2.5 Operating the shift levers on a racing bike

Racing bikes with curved handlebars are usually equipped with a racing-bike shift brake arm. The racing bike's shift levers are built into the brake handle. Depending on the model of the gear shifting system, gears may be shifted by moving the brake lever or by operating shift levers. On straight handlebars, the shift levers are located underneath the handlebars as with other types of cycle; see the "Derailleur shifting system" chapter.

Ask your dealer how the shift levers are operated. Keep off the road while you practice shifting gears to familiarise yourself with how the shift levers function.

6.3 Adjustments

WARNING

Dropped or jammed chain due to an incorrectly adjusted gear shifting system.

Risk of accident and injury!

- Adjust the gear shifting system.
- If you lack the necessary expertise or the tools required, contact your dealer.

CAUTION

Pinching and crushing of body parts by moving components.

Risk of injury!

- Be careful when handling moving parts so as not to get your fingers caught.
- Wear protective gloves if necessary.

NOTE

An incorrectly adjusted gear shifting system can cause damage to the system itself.

Risk of damage!

- Adjust the gear shifting system.
- If you lack the necessary expertise or the tools required, contact your dealer.

To shift gears smoothly, it is important that the front and rear derailleurs are precisely adjusted (see "Illustr.: Components of a derailleur shifting system").

➔ If the derailleur shifting system does not function or makes a noise when operated, have the system adjusted by your dealer.

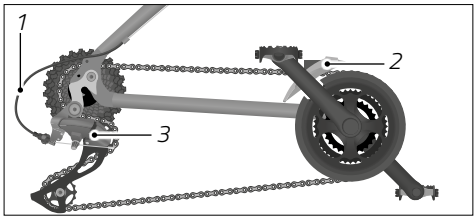

Illustr.: Components of a derailleur shifting system (example)

1 Shift cable

2 Front derailleur

3 Rear derailleur

6.3.1 Adjusting the rear derailleur

To keep the chain and rear derailleur out of the spokes and prevent the chain falling off the smallest sprocket, the stop screws (L and H) limit the range through which the rear derailleur can pivot (see "Illustr.: Diagram of a rear derailleur").

L stands for "low gear".

H stands for "high gear".

To adjust the rear derailleur, follow these steps:

1. Shift the chain onto the largest chainring and the smallest sprocket at the rear derailleur.
2. Turn the H stop screw until the guide pulley is exactly underneath the smallest sprocket.

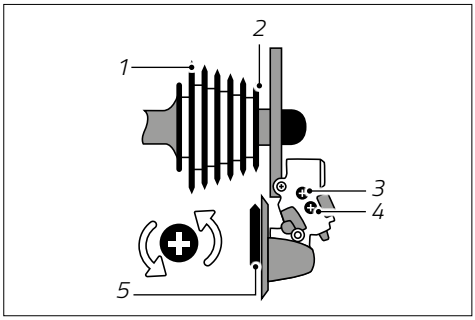

Illustr.: Diagram of a rear derailleur (example)

1 Largest sprocket

2 Smallest sprocket

3 H stop screw

4 L stop screw

5 Guide pulley

3. Pull the shift cable taut and fix it in place using the cable tensioning screw on the chain stays (see “Illustr.: Adjusting the rear derailleur”).
4. Shift the chain onto the smallest chainring and the largest sprocket.
5. Ensure that the chain does not touch the spokes under any circumstances. If necessary, correct this using the L stop screw (see “Illustr.: Front derailleur”).

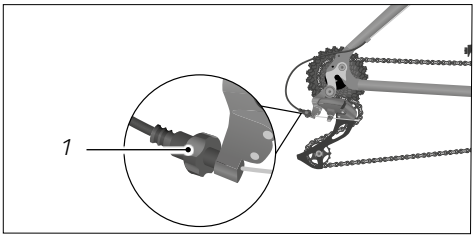

Illustr.: Adjusting the rear derailleur (example)

1 Cable tensioning screw on the chain stays

6.3.2 Adjusting the front derailleur

- Shift the chain onto the smallest chainring.
- Adjust the distance from the inner cage using the L stop screw. The distance should be 0.5–1 mm/0.02–0.04" (see “Illustr.: Front derailleur”).
- Shift the chain onto the largest chainring.
- Adjust the distance from the outer cage using the H stop screw. The distance should be 0.5–1 mm/0.02–0.04".

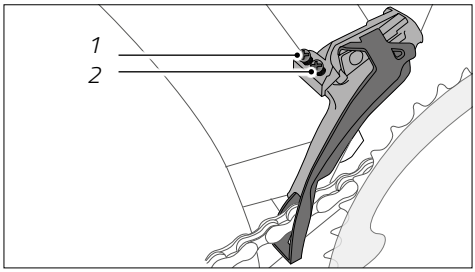

Illustr.: Front derailleur (example)

1 H stop screw

2 L stop screw

6.3.3 Readjusting the shift cable tension

- If noises are produced after shifting gear while riding, correct the shift cable tension using the cable tensioning screw on the shift lever (see "Illustr.: Cable tensioning screw on the shift lever").
  - To do this, give the cable tensioning screw a half turn.
  - If the noises decrease, turn the cable tensioning screw little by little in the same direction until no more noises are produced when riding.
  - If the noises increase, turn the cable tensioning screw little by little in the opposite direction until no more noises are produced when riding.

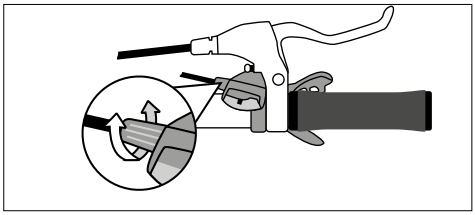

Illustr.: Cable tensioning screw on the shift lever (example)

- If noises continue to be produced after shifting gear while riding, have the gear shifting system adjusted by your dealer.

6.3.4 Adjusting the derailleur shifting system on a racing bike

If the racing bike has shift cables where the adjustment screw is equipped with an adjusting wheel, then the cable tension in the derailleur shifting system can be readjusted there.

- To increase the cable tension, turn the wheel of the adjustment screw anticlockwise.
- To reduce the cable tension, turn the wheel of the adjustment screw clockwise.

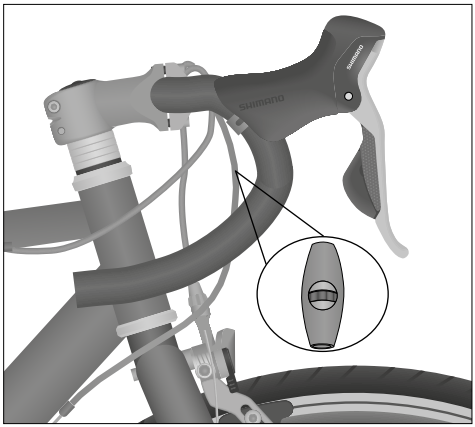

Illustr.: Adjusting the derailleur shifting system (example) Adjustment screw with wheel for adjusting the cable tension

To adjust the rear derailleur, see the "Derailleur shifting system / Adjustments / Adjusting the rear derailleur" chapter.

7 Hub shifting systems

7.1 Basics

Usually all modern cycles have a gear shifting system installed; this depends on the cycle model. Exceptions include children's bikes, which may only have one gear depending on the model.

The gear shifting system on a cycle consists of a variable gear unit and the corresponding controls. As a result, the power provided by the rider is adapted to suit the riding speed and route conditions.

Adjustments to the gear shifting system require expertise.

➔ If you lack the necessary expertise and the tools required to adjust the hub shifting system, contact your dealer.

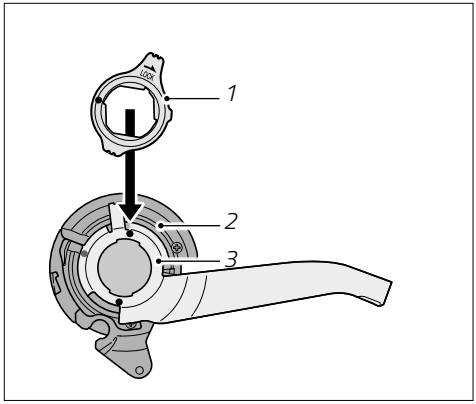

Illustr.: Components of a hub shifting system (example)

1 Fastening ring

2 Ratchet

3 Holder

7.1.1 Automatic shifting system (Automatix)

This chapter applies to models with an optional "Automatix" gear shifting system (see the specifications data sheet provided by the dealer).

The rear wheel hub is equipped with an automatic shifting system. Depending on the speed, the gear shifting system automatically switches to the 2nd gear or to the 1st gear, respectively.

Automatix gear shifting systems are available both with a freewheel and with a coaster brake. Check the data sheet completed by your dealer to find out which variant is installed.

➔ If the gear shifting system does not shift gear automatically, or produces noises, have the system checked by your dealer.

7.1.2 Stepless gear shifting system (NuVinci)

This chapter applies to models with an optional "NuVinci" stepless gear shifting system (see the specifications data sheet provided by the dealer).

The rear wheel hub is equipped with a stepless gear shifting system. The gear shifting system is infinitely adjustable by turning the twist-grip control.

NuVinci gear shifting systems are available both with a freewheel and with a coaster brake. Check the data sheet completed by your dealer to find out which variant is installed.

7.1.3 Stepless automatic gear shifting system (NuVinci Harmony)

This chapter applies to models with an optional "NuVinci Harmony" stepless automatic gear shifting system (see the specifications data sheet provided by the dealer).

The rear wheel hub is equipped with a stepless automatic gear shifting system which is not operated manually, but instead adapts to your speed and cadence automatically.

7.1.4 Electronic hub shifting system

An electronic hub shifting system requires dedicated button controls on the handlebars. The shifter buttons can be pressed in quick succession. The shifting system registers how many times they have been pressed, then changes gear accordingly.

7.2 Operation

WARNING

Inattention on the road.

Risk of accident and injury!

- Familiarise yourself with the features of the gear shifting system before your first ride.
- Only operate the gear shifting system if it will not take any of your attention off the road.
- Stop if you cannot operate the gear shifting system safely, e.g. in the event of a malfunction.

NOTE

Increased wear and damage due to operating the gear shifting system incorrectly.

Risk of damage!

- Do not pedal hard when shifting gears.
- Do not back-pedal when shifting gears.
- Shift down in good time before inclines.
- Always start riding in a low gear (lower third of the available gears), e.g. at maximum gears 1–3 if 9 gears are available.

Depending on your cycle model, a twist-grip control or shift lever with gear display may be installed. Twist-grip controls with a gear display are generally installed, and these are described here as an example.

Hub shifting systems are either stepless or have a number of gear levels.

- If you have no experience with gear shifting systems, have your dealer explain how the shifting system is operated.

7.2.1 Hub shifting systems with gear levels

- To shift up or down, turn the twist-grip control to the desired position (see "Illustr.: Twist-grip control").

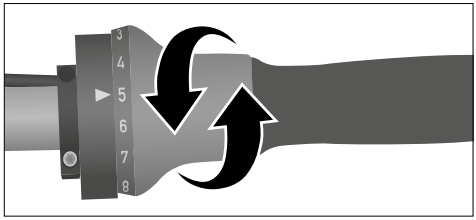

Illustr.: Twist-grip control (example)

7.2.2 Stepless hub shifting systems

- Turn the twist-grip control to shift up or down to an infinitely variable level (see "Illustr.: Stepless twist-grip control").

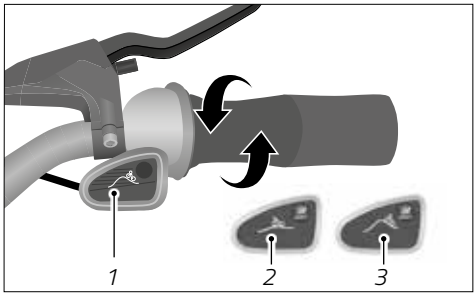

Illustr.: Stepless twist-grip control (example)

1 Display

2 Flat

3 Incline

7.2.3 Derailleur/hub shifting system (Dual Drive)

- Set the shift lever to the left when riding up an incline (see "Illustr.: DualDrive combined twist-grip and shift lever control").
- Position the shift lever in the middle on flat routes.
- Position the shift lever to the right on downhill routes.
- Turn the twist-grip control to shift up or down.

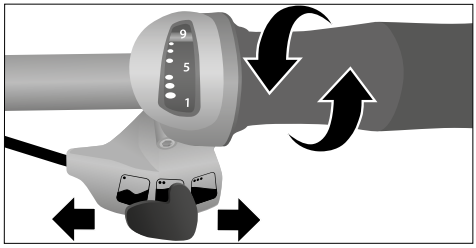

Illustr.: DualDrive combined twist-grip and shift lever control (example)

7.3 Adjustments

WARNING

Gear slippage and ineffective pedalling due to an incorrectly adjusted gear shifting system.

Risk of accident and injury!

- Adjust the gear shifting system.
- If you lack the necessary expertise or the tools required, contact your dealer.

NOTE

An incorrectly adjusted gear shifting system can cause damage to the system itself.

Risk of damage!

- Adjust the gear shifting system.
- If you lack the necessary expertise or the tools required, contact your dealer.

Adjustments to hub shifting systems may only be carried out by your dealer.

7.3.1 Adjusting the shift cable tension

Shift cable tension adjustment is dependent on the model of your hub shifting system.

- Check what hub shifting system is installed on your cycle (see the specifications data sheet provided by the dealer).
- If the functionality of the hub shifting system declines, adjust the shift cable tension.

1. Adjust the twist-grip control or shift lever to the middle gear setting. In a 7 or 8-speed system, this corresponds to 4th gear (see Illustr. “Adjustment screw on the twist-grip control”).

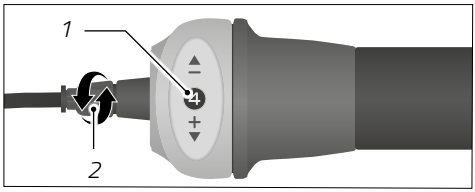

Illustr.: Adjustment screw on the twist-grip control (example)

1 Gear level

2 Adjustment screw

2. Adjust the twist-grip control adjustment screw (see Illustr.: “Adjustment screw on the twist-grip control”) so that the two coloured markings on the rear wheel hub match up (see “Illustr.: Adjustment marking”).
3. Check the adjustments with a test ride.
   - ➔ If you were unable to rectify the malfunction, have the shift cable tension adjusted by your dealer.

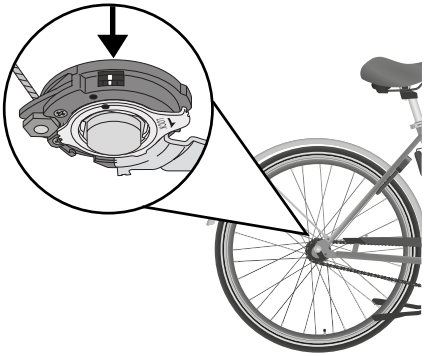

Illustr.: Adjustment marking (example)

A hub shifting system with a shift box may be installed, depending on the cycle model.

- ➔ Check the rear axle of the cycle to see whether a shift box is installed.

1. Adjust the twist-grip control or shift lever to the middle gear setting. In a 7 or 8-speed system, this corresponds to 4th gear (see “Illustr.: Shift box”).
2. Adjust the adjustment nut so that the markings on the shift box match up (see “Illustr.: Shift box”).
3. Check the adjustments with a test ride.

- ➔ If you were unable to rectify the malfunction, have the shift cable tension adjusted by your dealer.

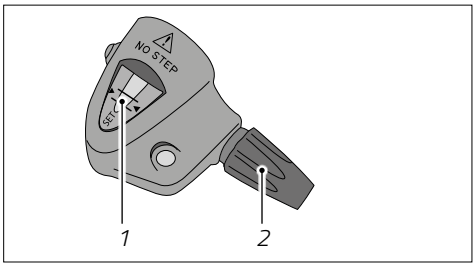

Illustr.: Shift box (example)

1 Marking

2 Adjustment nut

7.3.2 Adjusting the shift cable tension in a NuVinci shifting system

- If there is less than 0.5 mm/0.02" of play between the shift cable casing and the barrel, turn the adjustment nut clockwise (see “Illustr.: Play between the shift cable casing (left) and adjustment screw (right)”)
- If there is more than 1.5 mm/0.06" of play, turn the adjustment nut anticlockwise.
- Refer to the information enclosed with the cycle by the shifting system manufacturer.
- If you were unable to rectify the malfunction, have the gear shifting system adjusted by your dealer.

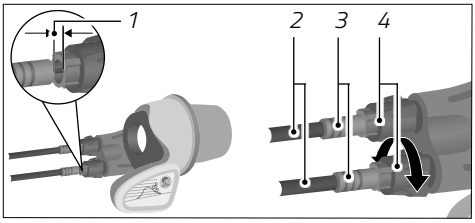

Illustr.: Play between the shift cable casing (left) and adjustment screw (right) (example)

3 0.5–1.5 mm/0.02–0.06"

4 Shift cable casing

5 Barrel

6 Adjustment screw

8 Pinion gearbox

A Pinion gearbox is a bottom bracket shifting system. A Pinion gearbox can be used with a chain or a belt drive (not illustrated). The Pinion gearbox has a twist-grip control fastened to the handlebars for shifting gears. In a Pinion gearbox, the chain is adjusted with a chain adjuster (see "Illustr.: Pinion gearbox with chain drive") or with movable fork ends (not illustrated). For belt tensioning, see the "Belt drive / Checking the belt tension" chapter. The Pinion gearbox is an oil-bath gearbox (see the "Pinion gearbox / Oil change" chapter). It is not possible to use a coaster brake with a Pinion gearbox.

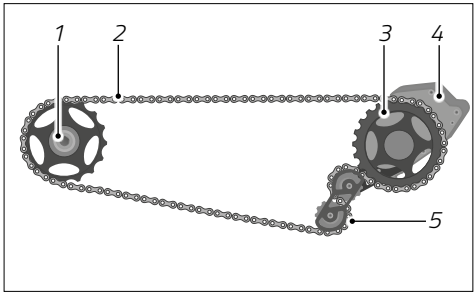

Illustr.: Pinion gearbox with a chain drive (example)

1 *Sprocket*
2 *Chain*
3 *Chainring*
4 *Pinion gearbox*
5 *Chain adjuster*

8.1 Before every ride

WARNING

Component failure.

Risk of accident and injury!

- Observe the maximum rider weight limit of 110 kg/243 lbs (including luggage and/or backpack).
- Only use your Pinion gearbox cycle in ambient temperatures between –15 °C and 40 °C/5 °F and 104 °F.

WARNING

Chain or belt motion while the crank is stationary.

Risk of accident and injury!

- Before every ride, make sure that the sprockets and rear wheel hub can freewheel smoothly.
- Turn the crank backwards. The chain must not revolve when the sprockets and rear wheel hub are freewheeling.
- Stop if damage occurs to the Pinion gearbox or unusual noises are produced.

8.2 Shifting gears with a Pinion gearbox

Note that the shifting behaviour of a Pinion gearbox, both with a chain and with a belt drive, is different to that of a derailleur shifting system. Keep off the road while you familiarise yourself with the Pinion gearbox and the change in shifting behaviour.

The marking (">>") on the fixed part of the twist-grip control shows the selected gear, for example between 01 and 18.

- To shift into a higher or lower gear, first move the twist-grip control slightly in the direction you want to shift, then quickly shift in the desired direction.
- It is possible to shift through multiple gears at once, such as from 02 to 06.
- Gears can be shifted while at a standstill and while the crank is stationary or turning backwards.
- There is limited potential for shifting down under load, for example from 18 to 17.
  - To protect the Pinion gearbox, gears are not shifted when the pressure on the crank or pedal is too strong, such as when riding out of the saddle.
- Only shift down when there is not a heavy load on the crank or pedal.

- There is potential for shifting up under load, for example from 02 to 03.
  - Exceptions to this are gear changes from 06 to 07 and from 12 to 13, as the gearbox needs to double-shift for these gear changes.
- ➔ Only shift from 06 to 07 or from 12 to 13 when there is not a heavy load on the crank or pedal.
- It is not possible to shift directly from the lowest gear to the highest or from the highest gear to the lowest.
- ➔ If the gears no longer shift precisely after running in or after longer use, contact your dealer.

8.3 Troubleshooting

A Pinion gearbox generally runs quietly with no disturbing noises. If any noises are produced and the gears shift properly, then the noises have another cause.

Troubleshooting when using a Pinion gearbox		
Fault	Possible cause	Solution
With a belt drive		
Grinding noises	Belt	Alter the belt tension
Belt tension varies in the course of a revolution	Front pulley is not centred, chainring bolts do not hold the front pulley central	Use chainring bolts with an external diameter of 10 mm/0.4"
With a belt drive and with a chain drive		
Creaking noises	Pedals, saddle, handlebars	Check all components or have them checked by the dealer
Cracking noises	Drive components with loose screw joints	Check the screw joints of drive components and have the dealer tighten them with a torque wrench if necessary
Clicking in 7th and 13th gear	Both gear levels have a freewheel pawl (models manufactured before 2014)	Noise is not a defect. Chargeable upgrade to new version of the gearbox on request
Humming or buzzing	Crossed chain or belt	Straighten the chain or belt

Troubleshooting when using a Pinion gearbox		
Fault	Possible cause	Solution
Gears do not shift smoothly	Worn or incorrect shift cables, outer casings or end caps	Only use shift cables with a maximum diameter of 1.2 mm/0.05"; only use shift cable outer casings; only use plastic end caps; be sure to replace worn shift cables
Slippage when pedalling	Freewheel pawl does not engage correctly	Further pedalling will engage the gear with the next tooth
With a chain drive		
Chain hits the chain stays	Chain tension too low	Have the chain tension adjusted by the dealer
Despite a functioning rear freewheel, pushing causes the chain or crank to revolve	Chain tension too high	

8.4 Cleaning a Pinion gearbox

NOTE

Damage to the Pinion gearbox due to using harsh or abrasive cleaners.

Risk of damage!

- Only clean the Pinion gearbox with water, dishwashing liquid and a soft, clean brush.
- Do not use strong jets of water or high-pressure equipment to clean the Pinion gearbox.

8.5 Maintaining a Pinion gearbox

NOTE

Loss of leak-tightness in the Pinion gearbox.

Risk of damage!

- Do not under any circumstances tighten or loosen the screws to the Pinion gearbox casing cover.

8.5.1 Maintaining a Pinion gearbox with a chain drive

- Regularly clean the chain, chainring, sprockets, and if necessary the Pinion gearbox chain adjuster (see the "Pinion gearbox / Cleaning a Pinion gearbox" chapter).
- Care for the chain by regularly applying a suitable lubricant.

8.5.2 Maintaining a Pinion gearbox with a belt drive

- Regularly clean the belt as well as the front and rear pulleys (see the "Belt drive / Cleaning the belt drive" chapter).
- Check the belt drive regularly for wear (see the "Belt drive / Belt drive wear" chapter).

For further maintenance work:

- If you lack the necessary expertise and the tools required, have maintenance work carried out by your dealer.

8.6 Oil change

NOTE

Oil leakage or spillage.

Pollution!

- Ensure that no oil gets into the sewer system or groundwater.
- Dispose of used oil in an environmentally friendly manner, according to applicable national and regional regulations.

The oil in the Pinion gearbox must be changed every 10,000 km / 6,000 mi or once a year, whichever comes first.

- If you lack the necessary expertise and the tools required, have the oil changed by your dealer.

1. Set out a collection container.
2. Use a suitable tool to loosen the four screws on the left-hand side of the gearbox cover (if looking in the direction of travel).
3. Use a suitable tool to loosen the oil drainage screw on the lower edge of the gearbox.
4. Lie the cycle on its left-hand side (if looking in the direction of travel) over the collection container and drain the oil into the container.
5. Stand the cycle upright or lie it on its right-hand side (if looking in the direction of travel).

6. Pour in new original Pinion gear oil.
7. Use a suitable torque wrench to tighten the oil drainage screw. Note the torque of the oil drainage screw.
8. Use a suitable torque wrench to tighten the four screws on the gearbox cover. Note the torque of the screws on the gearbox cover.

9 Belt drive

In addition to the commonplace chain drive, there are also belt drives available for cycles.

- If you lack the necessary expertise and the tools required to adjust or maintain a belt drive, have the drive checked and adjusted by your dealer.

9.1 Belt drive structure

A belt drive consists of a front and a rear pulley, plus a belt which may be made from various plastics depending on the belt model. To prevent the belt running off the pulleys, each pulley has a side flange. On the front pulley, the side flange is located on the outside. On the rear pulley, the side flange is located on the inside. Belt drives are compatible with hub shifting systems and coaster brakes, but not with derailleur shifting systems.

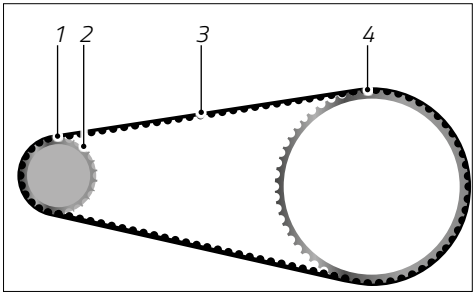

Illustr.: Belt drive (example)

1 Rear pulley
2 Rear side flange
3 Belt
4 Front pulley (side flange hidden)

9.2 Using the belt drive

NOTE

Damage to the belt due to incorrect handling.

Risk of damage!

- Ensure that the belt is not creased, twisted, bent backwards, turned inside out, tied or used as a strap wrench.
- During fitting, the belt must not be rolled up with the front pulley chainring or levered on e.g. with a screwdriver.

For belt drives, the force applied by the rider is transmitted via a belt. A cycle with a belt drive can be used in all cycling-friendly weather conditions.

9.3 Checking the belt tension

In order for the belt drive to function properly, the belt needs to be correctly tensioned. Have the belt tension regularly checked by your dealer.

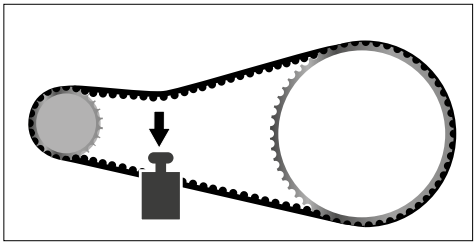

Illustr.: Belt tension (example)

9.4 Belt drive wear

To minimise wear with a belt drive, it is important for the belt to run parallel between the side flanges. Depending on the model of the belt drive, there should be

- a maximum deviation of 3 mm/0.1" measured at the centre of the belt's running surface
- and/or a maximum angular misalignment of 0.5° between the pulleys.

➔ If you find wear on the belt drive but you lack the necessary expertise and the tools required to replace it, have the belt drive or worn parts replaced by your dealer.

9.4.1 Visually inspecting the belt for wear

The belt is subject to a certain degree of wear, depending on distance travelled and riding conditions.

➔ Visually inspect the belt regularly for signs of wear.

If, for example, you find pointed, torn or missing teeth (see "Illustr.: Belt wear"), then the belt is worn.

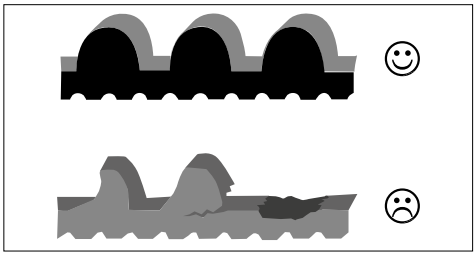

Illustr.: Belt wear (example)

9.4.2 Visually inspecting the belt drive for wear

Sign of wear	Solution for belt drive		
	Replace front pulley	Replace rear pulley	Replace belt
Front pulley			
Side flange bent inwards	x	x	x
Side flange bent outwards	x		
Tooth profile damaged	x		
Rear pulley			
Wobbling on hub		x	
Faulty fit		x	
Spinning		x	
Sheared pulley		x	x
Sharp side flange	x	x	
Belt			
Creased belt			x
Belt tooth profile damaged			x
Belt cracked, porous			x
Belt frayed			x
Tearing in belt			x

9.4.3 Visually inspecting the chainring for wear

If, for example, you notice "shark teeth" on the chainring (see "Illustr.: Chainring wear"), the chainring is worn.

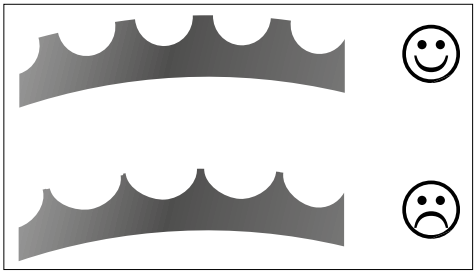

Illustr.: Chainring wear (example)

9.5 Cleaning the belt drive

NOTE

Damage to the belt drive due to using harsh or abrasive cleaners.

Risk of damage!

➔ Only clean the belt drive with water and a soft brush.

10 Wheels and tyres

The wheel consists of a hub, sprocket cassette, sprocket or pulley, and, if applicable, a brake disc, spokes and a rim. Tyres are fitted to the wheel rim. Depending on the cycle model, the tyre may contain an inner tube. The front tyre is part of the front wheel and the rear tyre is part of the rear wheel.

– If an inner tube is used, rim tape is placed on the rim to protect the inner tube from the rim surface and the spoke nipples.
– If no inner tube is used, "tubular" tyres are used for racing bikes or UST (universal system tubeless) tyres for MTBs.

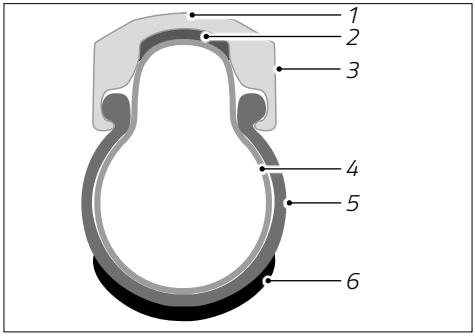

Illustr.: Cross section of a wheel and tyre (example)

1 Rim
2 Rim tape
3 Sidewall braking surface
4 Inner tube
5 Tyre
6 Tread

Wheels are exposed to considerable loads due to the weight of the rider and luggage, as well as bumps in the road.

➔ Have the wheels checked and re-centred by your dealer after breaking in the cycle (no longer than 300 km / 186 mi of riding, 15 hours of operation or 3 months, whichever comes first).
➔ Check the wheels regularly after breaking in.
➔ If you lack the necessary expertise and the tools required, have your dealer check the wheels and centre them if necessary.

10.1 Tyres and valves

DANGER

Poor visibility to other road users.

Risk of accident and injury!

- Ensure that reflectors are clean and easily visible.

CAUTION

Inner tube blow-out due to penetration by foreign bodies.

Risk of accident and injury!

- Check the tyres regularly for damage and wear.
- Replace damaged or worn tyres immediately.
- Have damaged or worn tyres replaced by your dealer if you lack the necessary expertise and the tools required.

NOTE

Damage due to fitting a tyre that differs from the original size.

Risk of damage!

- Contact your dealer if you have any questions about tyre size.

The tyres allow the cycle to grip the road, transmit the drive and brake forces to the road surface, and provide cushioning when the road is uneven. Various types of tyre may be fitted depending on how the cycle is used.

Tyre size is indicated on the sidewall of each tyre. A variety of specifications may be recorded here, such as:

- The ETRTO size, which is given in millimetres. If 52-559 is indicated on the tyre, then the inflated tyre is 52 mm wide with an internal diameter of 559 mm. (ETRTO stands for the European Tyre and Rim Technical Organisation).
- The size in inches. If 26 × 2.35 is indicated on the tyre, then the inflated tyre is 2.35" wide with an internal diameter of 26".

With the exception of tubular tyres and UST tyres, the tyre and rim alone are not airtight. An inner tube is used to keep air inside the tyre, and this is filled via a valve.

10.1.1 Valve types

Cycles may be equipped with one of the following valve types (see "Illustr.: Valve types"):

- Presta valve (PV): secured with a tappet in the valve, rim hole 6.5 mm/0.26".
- Dunlop valve (DV): secured with a union nut, rim hole 8.5 mm/0.33".
- Schrader valve (SV): secured with a tappet in the valve, rim hole 8.5 mm/0.33".

All three valve types have a valve cap to prevent the valve getting dirty.

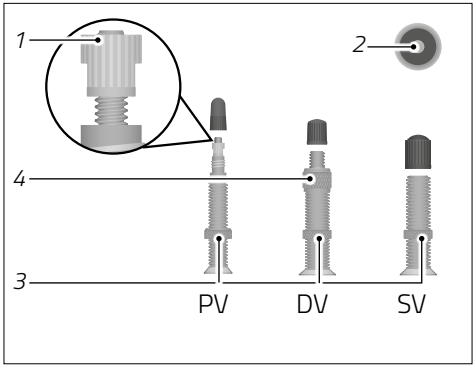

Illustr.: Valve types (example)

1 Knurled screw

2 Valve tappet

3 Lower knurled nut

4 Upper knurled nut

10.1.2 Tyre pressure

WARNING

Inner tube blow-out or tyre jumping off the rim due to excessively high tyre pressure.

Risk of accident and injury!

- Observe the tyre pressure.
- Use a pump with a pressure display when inflating the tyres.

NOTE

Damage to the inner tube due to insufficient tyre pressure.

Risk of damage!

- Do not ride over sharp edges if the tyre pressure is too low.
- Observe the tyre pressure.
- Use a pump with a pressure display when inflating the tyres.

Tyre pressure is indicated on the sidewall of the tyre. The tyre pressure is given in bar or psi (pounds per square inch). See the “Tyre pressure conversion” table.

The lower tyre pressure limit is suitable for light riders and uneven ground, and provides more comfortable suspension with greater rolling resistance. The upper tyre pressure limit is suitable for heavy riders and even ground, and provides low rolling resistance with less comfortable suspension.

If there is an indication of the tyre inflation pressure on the rim in addition to the tyre side wall, the lower of the two values determines the maximum tyre inflation pressure.

- Always ride with the prescribed tyre pressure.
- Check the tyre pressure regularly.
- Inflate the tyres with air to at least the lower tyre pressure limit and no more than the upper limit.
- Use a pump with a pressure display when inflating the tyres.

Tyre pressure conversion			
psi	bar	psi	bar
12	0.8	80	5.5
15	1.0	90	6.2
30	2.1	100	6.9
40	2.8	110	7.6
50	3.5	120	8.3
60	4.1	130	9.0
70	4.8	140	9.7

10.2 Rims and spokes

Spokes with uniform tension are required in order for a wheel to run true. The tension of individual spokes may be altered by riding too quickly over obstacles such as kerbs, or if a spoke nipple comes loose. Wheel trueness and rim stability are reduced when individual spokes are damaged or no longer taut.

WARNING

Risk of falling due to locked up rim brakes or wobbly wheels in the event of rim run-out.

Risk of accident and injury!

- Only use true-running wheels.
- Have loose spokes tensioned by your dealer.
- Have your dealer centre untrue wheels immediately.

10.3 Fitting and removing the front/rear wheel

WARNING

Risk of falling due to wheels loosening if quick-release axles are not fastened.

Risk of accident and injury!

- Before every ride, check that the wheels are securely inserted in the fork ends.

WARNING

Wheel drop-out due to loosened fastenings.

Risk of accident and injury!

- Check the wheel fastenings before every ride.

CAUTION

Risk of burning due to hot brake discs!

Risk of injury!

- Always let the brake discs cool down before opening the quick release or wheel fastening.

NOTE

Damage to the brake due to removing the front or rear wheel.

Risk of damage!

- If you lack the necessary expertise and the tools required, have the front or rear wheel removed and fitted by your dealer only.

Depending on the cycle model, the wheels are fastened in the fork ends with quick-release axles, thru-axles or conventional axles with hub axle nuts.

➔ If you lack the necessary expertise and the tools required to adjust quick-release axles, contact your dealer.

The cycle may be equipped with conventional thru-axles, lever-type thru-axles or quick-release axles. The axles can be replaced with anti-theft axles.

Axles pass through the wheels and are fastened between the fork ends of the cycle. The fork ends may be open or closed depending on the front fork model. These have different fitting and removal methods.

There is a large variety of fastening systems on the market. Have your dealer demonstrate and explain how the fastening systems on your cycle function.

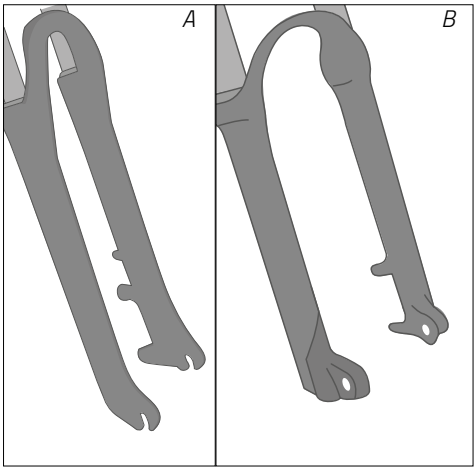

Illustr.: Open (A) and closed (B) fork ends (example)

Thru-axles and quick-release axles can be fitted with anti-theft devices or replaced with axles that feature integrated anti-theft protection. Wheels may be secured in various ways depending on the model:

– Some models cannot be unfastened while the cycle is in an upright position.
– With some models, a dedicated tool is required to loosen the hub axle nut or quick-release adjusting nut.

➔ Ask your dealer about anti-theft thru-axle and quick-release axle options.

➔ Refer to the information enclosed by the manufacturer about fitting the axles.

➔ If you lack the necessary expertise and the tools required to adjust or fasten axles, contact your dealer.

10.3.1 Front/rear wheels with quick-release axles

10.3.1.1 Fitting

1. Push the quick-release axle through the wheel hub and give the quick-release adjusting nut one or two turns to screw it on to the quick-release axle.
2. Insert the front/rear wheel and quick release into the fork ends.
   - ➔ If applicable, follow the specifications regarding the front/rear wheel running direction. This specification generally relates to the tyre tread and can be found on the sidewall of the tyre.
3. Tilt back the quick-release lever until it stops (see "Illustr. Wheel with quick-release axle"). Position the quick-release lever so that it cannot be unintentionally opened, e.g. by putting it up.
   - ➔ If the quick-release axle or the front/rear wheel is not firmly in place, or if you can pull the quick release without any effort, readjust the tension (see the "Basic adjustments / Quick releases" chapter).

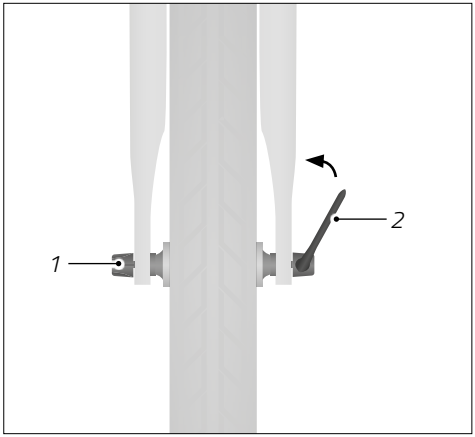

Illustr.: Wheel with a quick-release axle (example)

1 Quick-release adjusting nut

2 Quick-release axle lever

10.3.1.2 Removal

1. To unfasten the quick-release axle, pull the axle lever outwards.
2. Rotate the cotter pin nut of the quick release anticlockwise away from the quick-release axle until you can remove the front/rear wheel from the fork ends.

10.3.2 Front/rear wheels with thru-axles

10.3.2.1 Fitting

1. Align the front/rear wheel between the fork ends so that the fork ends and wheel hub form a straight line.
   - ➔ If applicable, follow the specifications regarding the front/rear wheel running direction. This specification generally relates to the tyre tread and can be found on the sidewall of the tyre.
2. Push the thru-axle through the fork ends and the wheel hub.
3. Fasten the thru-axle. Depending on the model of the thru-axle, this may be done by tightening with or without a tool, by using a quick-release lever, or a combination of both methods. Observe the user manual for the thru-axle, if applicable.

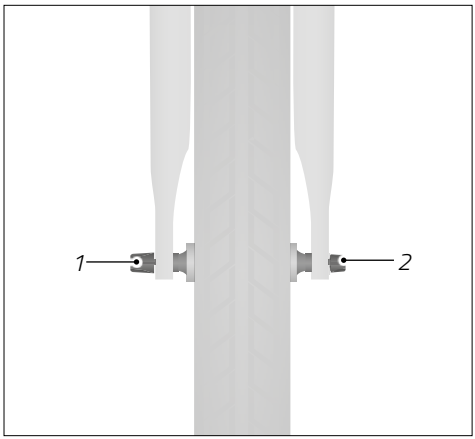

Illustr.: Wheel with a thru-axle (example)

1 Quick-release adjusting nut

2 Thru-axle

10.3.2.2 Removal

1. Loosen or open the thru-axle. Depending on the model of the thru-axle, this may be done by loosening with or without a tool, by using a quick-release lever, or a combination of both methods. Observe the user manual for the thru-axle, if applicable.
2. Secure the front/rear wheel.
3. Pull the thru-axle out of the fork ends and wheel hub.
4. Remove the front/rear wheel.

10.3.3 Front/rear wheels with screw joints

10.3.3.1 Fitting

1. Turn the quick-release adjusting nut off the axle and remove the attached hub axle washer from the axle.
2. Insert the front/rear wheel into the fork ends.
   - ➔ If applicable, follow the specifications regarding the front/rear wheel running direction. This specification generally relates to the tyre tread and can be found on the sidewall of the tyre.
3. Push the hub axle washers onto the axle.
4. Align the rear wheel so it is flush with the frame.
5. Tighten the quick-release adjusting nut, observing applicable torques (see "Illustr. Wheel with screw axle").
   - ➔ If the front/rear wheel is not securely fastened, do not continue to ride the cycle. Have the axle checked or adjusted by your dealer.

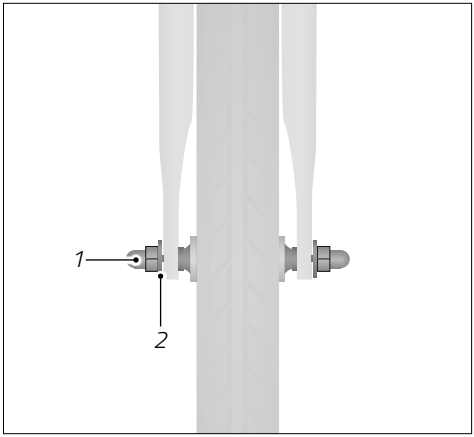

Illustr.: Wheel with screw axle (example)

1 Quick-release adjusting nut

2 Hub axle washer

10.3.3.2 Removal

1. Turn the quick-release adjusting nut off the axle and remove the attached hub axle washer from the axle.
2. Remove the front/rear wheel from the fork ends.

10.3.4 Carbon wheels

Carbon wheels, made from carbon fibre reinforced plastic, are notable for their high rigidity and low weight. Rims with higher sidewalls also have particular aerodynamic qualities.

If your cycle is equipped with carbon wheels, refer to the specifications on the frame or ask your dealer about the maximum gross weight limit for the cycle.

WARNING

Reduced brake action with rim brakes due to moisture on carbon rims.

Risk of accident and injury!

- Do not use carbon wheels with rim brakes in wet conditions.

NOTE

Rim deformation or tyre blow-out due to the heat generated while braking with rim brakes e.g. when riding downhill in the mountains.

Risk of damage!

- Use both brakes for longer periods of braking.
- Release the brakes at regular intervals for a while so that the brake pads and rims can cool down.

- Only use brake pads that are suitable for carbon wheels.
- Keep off the road while you practice braking with carbon wheels.
- Note that brake pads for carbon wheels wear more quickly than other brake pads.
- Note that brake pads for carbon wheels are heat-sensitive and not suitable for prolonged braking, e.g. on long descents. Ensure you have regular cooling periods with no brake operation.

11 Telescopic seat post

This chapter contains information about the basics of telescopic seat posts, as well as their adjustment and operation.

11.1 Basics

WARNING

Inattention on the road.

Risk of accident and injury!

- Familiarise yourself with the features of the telescopic seat post before your first ride.
- Only operate the telescopic seat post if it will not take any of your attention off the road and terrain.
- Stop if you cannot operate the telescopic seat post safely.

WARNING

Loss of eyesight on contact with hydraulic fluid.

Risk of accident and injury!

- If hydraulic fluid gets in your eye, rinse it out with clean water straight away.
- Contact a doctor immediately after contact with hydraulic fluid.

Depending on the cycle model, there may be a telescopic seat post installed. A telescopic seat post allows the saddle height to be adjusted by operating a lever underneath the saddle or a remote control on the handlebars, both at a standstill and while riding. Height adjustments may be stepped or stepless, depending on the design of the telescopic seat post. When the handlebar remote control is operated, this is transmitted to the telescopic seat post either mechanically, hydraulically or via a wireless signal.

- Refer to information from the telescopic seat post manufacturer.
- If you lack the necessary expertise or the tools required to adjust, maintain or operate the telescopic seat post, contact your dealer.

11.2 Operation

Depending on the design of the telescopic seat post, the remote control may be equipped with one or two levers. Where there are two levers, each lever is generally associated with a point between the upper and lower saddle positions.

- To lower the saddle, place weight on it and operate the lever. Once the saddle has reached the desired position, release the lever.
- To raise the saddle, take the weight off it and operate the lever. Once the saddle has reached the desired position, release the lever.

11.3 Adjustments

11.3.1 Adjusting the cable tension

If your cycle has a mechanical remote control:

The cable tension for the telescopic seat post remote control must be adjusted in the event of a malfunction, for example if the saddle height cannot be adjusted or if the saddle height changes despite not operating the lever or button.

➔ Refer to information from the manufacturer about adjusting the cable tension.

11.3.2 Adjusting the extension speed

The extension speed for the telescopic seat post is generally adjusted using the speed adjustment screw on the remote control. The extension speed is reduced or increased depending on the turning direction.

➔ Refer to information from the manufacturer about adjusting the extension speed.

11.3.3 Telescopic seat post remote control position

The position of the telescopic seat post remote control must be custom-adjusted so that the lever or button can be operated easily and safely (see "Illustr.: Remote control position").

➔ If you lack the necessary expertise or the tools required, have your dealer adjust the remote control position to suit your needs.

3. Loosen the remote control screw by turning it anticlockwise.
4. Position the remote control so that the lever or button is easily accessible while riding.
5. Tighten the remote control screw by turning it clockwise.

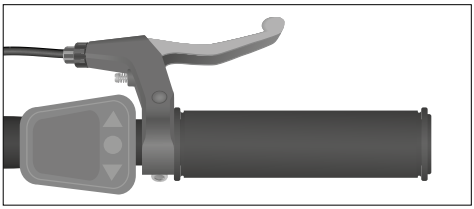

Illustr.: Remote control position (example)

11.3.4 Adjusting a pneumatic telescopic seat post

Air pressure influences factors such as the extension speed and the force that must be exerted in order to lower the telescopic seat post. The air pressure inside the pneumatic telescopic seat post is pre-set by the manufacturer and only needs to be adjusted in the event of a malfunction.

➔ Have the telescopic seat post adjusted by your dealer.

11.3.5 Bleeding a hydraulic telescopic seat post

A hydraulic telescopic seat post must be bled once it stops fully extending or the saddle starts to sink after the lever is released.

➔ Have the telescopic seat post bled by your dealer.

12 Suspension

This chapter contains information about the basics of suspension elements, as well as their adjustment and operation.

If suspension elements are too soft, they will no longer provide cushioning against bumps and the suspension will bottom out.

Suspension elements must be adjusted or tuned to prevent bottoming out. If a suspension element frequently bottoms out, it (and often the frame too) will become permanently damaged.

- If you lack the necessary expertise and the tools required for the adjustments, have suspension elements adjusted by your dealer.

12.1 Suspension seat post

Depending on the cycle model, the cycle may be equipped with a suspension seat post.

Suspension seat posts increase comfort and safety when riding over uneven ground. The suspension seat post must be adjusted to the rider's body weight. This requires expertise, and it may be necessary to replace the springs.

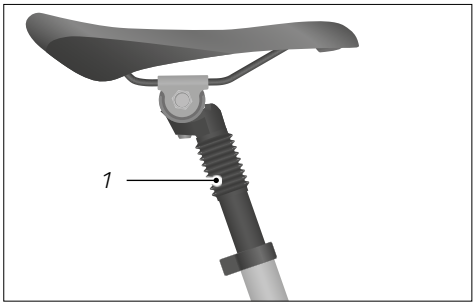

Illustr.: Suspension seat post (example)

1 Suspension inside

12.2 Suspension fork and rear suspension

12.2.1 Basics

Depending on the cycle model, the cycle may be equipped with a suspension fork and/or rear suspension.

Suspension forks absorb impacts to the front wheel and increase comfort as well as safety when riding over uneven ground. The suspension fork must be tuned to the intended use and the rider's weight.

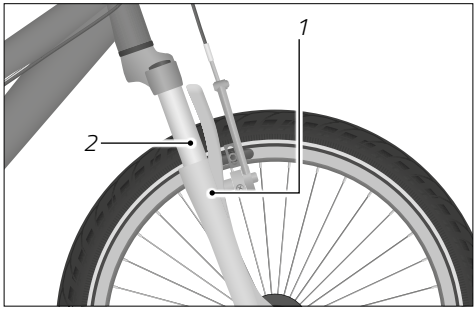

Illustr.: Suspension fork (example)

1 Suspension fork stanchion leg

2 Suspension fork lower leg

Rear suspension, which is installed centrally between the front and rear frame, absorbs impacts to the rear wheel and increases comfort as well as safety when riding over uneven ground. The rear suspension must be tuned to the intended use and the rider's weight. Rear suspension increases comfort when riding over uneven ground.

➔ If your cycle is equipped with adjustable rear suspension, refer to the adjustment information enclosed by the manufacturer.

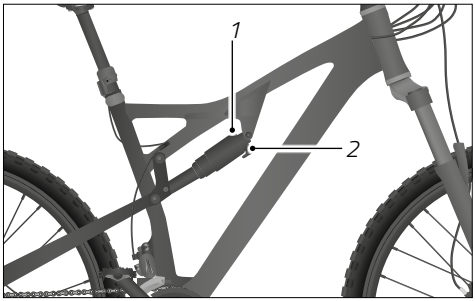

Illustr.: Rear suspension (example)

1 Spring stiffness adjustment

2 Damping adjustment

12.2.2 Operation

NOTE

Increased wear due to lockout use.

Risk of damage!

- Only use the lockout on even roads.
- Only use the lockout if it improves handling.

- Refer to the information enclosed by the manufacturer about operating suspension forks.
- To lock the suspension fork, turn the knob anticlockwise until it stops.
- To unlock the suspension fork, turn the knob clockwise until it stops (see “Illustr.: Suspension fork lockout control”).
- Check whether the rear suspension can be locked. If necessary, ask a professional how the rear suspension is locked and unlocked.

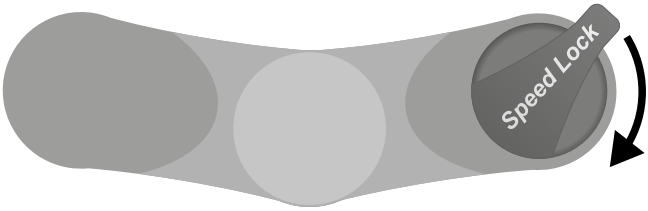

Illustr.: Suspension fork lockout control (top view, example).

On models with a mechanical suspension element:

- To increase the spring preload and so adjust the Sag to a lower level, turn the knob on the suspension fork or rear suspension in the “+” direction (see “Illustr.: Suspension fork knob”).
- To reduce the spring preload and so adjust the sag to a higher level, turn the knob on the suspension fork in the “–” direction.
- If you lack the necessary expertise and the tools required to optimally adjust the sag, have the suspension adjusted by your dealer.

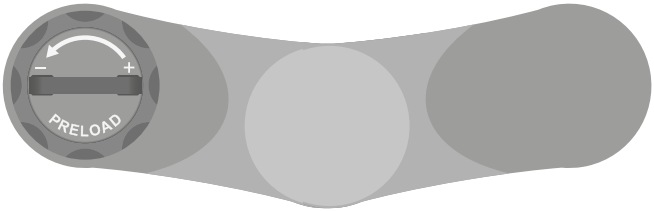

Illustr.: Suspension fork knob (top view, example).

On models with air chambers:

- To adjust the spring preload, increase or reduce the air pressure in the suspension fork.
- To increase or reduce the suspension fork air pressure, you will need a dedicated damper pump.
- If you lack the necessary expertise and the tools required for the adjustments, have suspension elements adjusted by your dealer.

12.2.3 Adjustments

The following adjustment options are generally available:

- Compression and rebound
- Sag (compression under body weight)
- Lockout (suspension locking feature)

12.2.3.1 Compression and rebound

Adjusting the compression and rebound influences the damping or response behaviour of the suspension fork or rear suspension. The ratio between compression and rebound is crucial. Depending on the cycle model, the suspension may only be equipped for rebound adjustment. The ratio between compression and rebound is determined by the condition of the road. A correctly adjusted ratio ensures optimum contact between the wheels and the ground.

➔ Have the compression and rebound adjusted by your dealer.

12.2.3.2 Sag

Sag is the amount of compression caused by the rider's body weight. Depending on the model of the suspension fork or rear suspension, and depending on the intended use, the Sag is adjusted to a value between 15 % and 40 % of the total suspension travel.

Sag is influenced by the spring preload. When the sag is optimally adjusted, the suspension will compress by 15 % to 40 % of its travel when the rider sits on the cycle.

The sag is determined by the spring preload or by the adjustable air pressure in the suspension fork or damper. The spring preload or the air pressure therefore determine the stiffness of the suspension and whether the chassis is hard or soft.

➔ Have your dealer adjust the suspension fork or rear suspension to your body weight and riding style.

Have your dealer adjust the suspension fork / damper sag to suit your body weight and riding style. This is usually dealt with through air pressure or by replacing suspension elements.

12.2.3.3 Lockout

The lockout feature locks the suspension fork. This can reduce bob or squat in the front fork, e.g. where the suspension sinks when pedalling hard.

Depending on the cycle model, the rear suspension may also be equipped with a lockout feature.

Bumps cause the suspension fork to compress slightly even when locked. This is for technical reasons and protects the front fork against damage.

13 Cleaning

CAUTION

Pinching and crushing of body parts by moving components.

Risk of injury!

- Be careful when handling moving parts so as not to get your fingers caught.
- Wear protective gloves if necessary.

CAUTION

If you clean the pedals of the vehicle with a high-pressure device, flying parts can cause injury.

Risk of injury!

- Never clean vehicle pedals with a hard water jet or high-pressure equipment.

NOTE

Use of incorrect cleaners.

Risk of damage!

- Do not use abrasive cleaning products.
- Do not use sharp, angular or metallic cleaning tools.
- Do not use strong jets of water or high-pressure equipment to clean the cycle.

What you need for cleaning and maintenance:

- Clean cloths
- Mild, lukewarm soapy water
- A soft brush or sponge
- Cleaners and preservers
- Universal oil

➔ If necessary, consult your dealer about suitable cleaners and preservers.

➔ Clean the cycle regularly, even if it is only slightly dirty.

➔ Wipe all surfaces and components with a damp sponge.

➔ Use mild soapy water to moisten the sponge.

➔ Wipe all surfaces and components dry after cleaning.

➔ Preserve all paintwork and metallic surfaces on the frame at least every six months.

➔ Do not preserve the rims if you have rim brakes, or the brake discs if you have disc brakes.

➔ Refer to and follow the notes in the information enclosed by the manufacturer about cleaning individual components.

13.1 Brakes

CAUTION

Risk of burning due to hot brake discs.

Risk of injury!

- Wait until the brake discs have cooled down before touching them.

CAUTION

Diminished brake action due to soap residue, oil, grease or care products on the rims or brake blocks, or on the brake discs or brake pads.

Risk of accident and injury!

- Avoid grease and oil contact with the rim, brake disc, brake blocks or brake pads.
- Do not use the cycle if grease or oil has touched the rim, brake disc, brake blocks or brake pads. Have oil-contaminated components professionally cleaned, and if necessary replaced by your dealer.
- Remove soap and care product residue after cleaning.
- Check the brakes for soap and care product residue after cleaning.

- Remove dirt from the brake components, brake calliper and rim immediately with a slightly damp cloth and if necessary a little brake cleaner.

13.2 Suspension

If the cycle is equipped with a suspension fork, a suspension seat post or rear suspension:

1. Remove dirt from the sliding surfaces and the adjacent seals immediately with a clean cloth, lightly oiled if necessary (see "Illustr.: Suspension fork sliding surface" and "Illustr.: Suspension seat post sliding surface").
2. Oil the sliding surface with a little universal oil after cleaning.
3. Compress and extend the suspension five times. Then remove excess oil with a clean cloth.

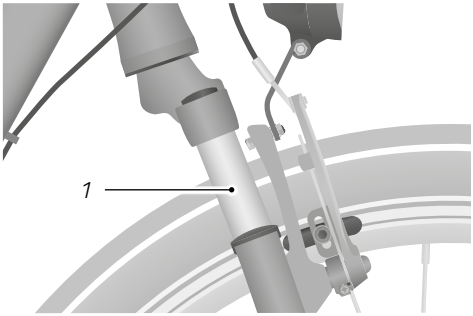

Illustr.: Suspension fork sliding surface (example)

1 Sliding surface

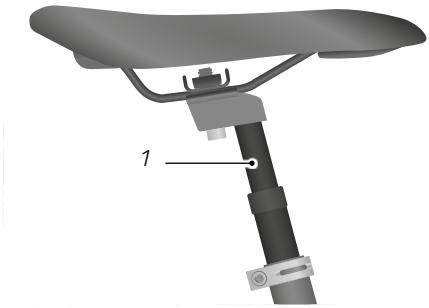

Illustr.: Suspension seat post sliding surface (example)

1 Sliding surface

13.3 Gear shifting system

NOTE

Incorrectly chosen grease, oil and care products can damage the components.

Risk of damage!

- Consult your dealer about the use of greases, oils and care products, particularly with derailleur shifting systems.
- Do not use water for cleaning, and do not use chemical brake cleaners or thinners.
- Do not use gun oil or rust removal spray.

- Clean the controls for the gear shifting system with a damp cloth.
- Clean the moving components in derailleur shifting systems with a damp cloth or a soft brush, provided they are easily accessible (see "Illustr.: Moving components of a derailleur shifting system").
- Oil the moving components in derailleur shifting systems with a little universal oil after cleaning, provided they are easily accessible.
  - Then remove excess oil with a clean cloth.

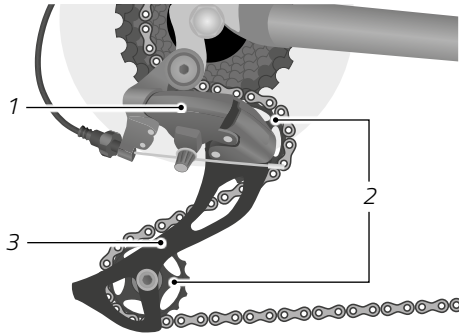

Illustr.: Moving components of a derailleur shifting system (example)

1 Rear derailleur

2 Jockey wheels

3 Chain adjuster

13.4 Chain

- If the cycle is equipped with an all-round chain guard, have your dealer explain how to remove and fit the guard, or have them remove and fit it for you. Remove dirt from the bike chain with a clean cloth, lightly oiled if necessary.
- Remove dirt from the sprockets and chainrings with a small, soft brush.
- Oil the chain with a little universal oil at regular intervals, after cleaning and after riding in the rain.
  - Contact your dealer regarding stubborn dirt.

14 Maintenance

WARNING

Brake failure or material breakage due to incorrect maintenance and inspection.

Risk of accident and injury!

- Do not carry out any maintenance on the cycle if you lack the necessary expertise and the tools required.
- Have the cycle regularly checked by your dealer as well.

CAUTION

Risk of burning due to hot brake discs.

Risk of injury!

- Let the brake discs cool down before maintenance.

CAUTION

Material fatigue and material breakage due to tightening screw joints incorrectly.

Risk of accident and injury!

- Loose screw joints must be properly tightened with a torque wrench.
- Loose screw joints must be tightened using the correct torques.
- Have your dealer tighten loose screw joints.

CAUTION

Alterations to the cycle and incorrectly chosen spare parts can cause the cycle to malfunction.

Risk of accident and injury!

- Consult your dealer about suitable spare parts.
- Only use original spare parts.

NOTE

Dripping oil or grease.

Pollution!

- Ensure that there is no dripping oil or grease.
- Clear up spilled oil or grease immediately with a cloth.
- Dispose of spilled oil or grease residue in an environmentally friendly manner, according to applicable national and regional regulations.

NOTE

Oil or grease on the cycle can transfer onto clothes.

Risk of damage!

- Remove excess oil or grease with a cloth after cycle care.
- Keep your clothes away from oil and grease.

Consult your dealer about suitable spare parts before fitting.

What you need for maintenance:

- Clean cloths
- Preservers
- Universal oil

➔ If necessary, consult your dealer about suitable lubricants and preservers.

➔ Have all maintenance and repairs documented by your dealer.

➔ If you find damage, do not use the cycle and have it checked or repaired by your dealer.

➔ Have loose screw joints checked by your dealer if you lack the necessary expertise and the tools required.

14.1 Inspection intervals

➔ Have your dealer inspect the cycle at the following intervals:

Inspection intervals			
Inspection	Distance travelled	Hours of operation	Duration of use
1st Inspection	after 300 km / 190 mi* or	after 15 hours of operation* or	after 3 months*
2nd Inspection	after 2,000 km / 1,250 mi* or	after 100 hours of operation* or	after one year*
Each subsequent inspection	after a further 2,000 km / 1,250 mi* or	after a further 100 hours of operation* or	after a further year*
*whichever is the earliest			

➔ If you use the cycle in difficult conditions or ride more than 2,000 km / 1,250 mi* per year, shorten the inspection intervals and have an inspection carried out by your dealer every 6 months.

Examples of difficult conditions include:

- Frequent use on demanding terrain
- Operation in poor weather conditions, e.g.:
  - in winter: particular risk of corrosion due to salt on the roads
  - in mud or slush: increased wear due to excessive dirt in moving parts
- Operation with constant heavy loads

- Follow the inspection interval specifications in the manuals enclosed with the various cycle components.
- Carry out the following maintenance work once a month or after a fall.

Your cycle has a variety of parts that require particular attention, especially with regard to their exposure to dirt, dust or moisture, or simply because of their relevance to safety. It is therefore in your own interest to observe the inspection intervals.

A possible cause of increased wear can be sand and dirt in the chain, cassette and chain rings.

14.2 Screw joints

- Check the vehicle regularly for loose screw connections according to the maintenance schedule and tighten loose screws with a torque wrench.
  - Do not ride the cycle if you find loose screw joints.
  - Have loose screw joints checked by your dealer if you lack the necessary expertise and the tools required.

14.3 Frame and rigid fork

- Check the frame and rigid fork for cracks, deformation or discolouration.
  - If the frame or the rigid fork is cracked, deformed or discoloured, contact your dealer immediately.
  - Do not use the cycle if you find any cracks, deformation or discolouration.

14.4 Suspension fork

- Check the suspension fork for cracks, deformation or discolouration.
  - If the suspension fork is cracked, deformed or discoloured, contact your dealer immediately.
- Compress and extend the suspension fork.
  - If you hear unusual noises or the suspension fork gives way without any resistance, have it checked by your dealer.
- Clean and oil the suspension fork (see the “Cleaning” chapter).

14.5 Luggage carrier and mudguards

1. Hold the cycle firmly by the frame.
2. Pull the luggage carrier back and forth to check that all the screw joints are tight and do not move.
3. Pull the mudguards back and forth to check that they are firmly in place.
   - ➔ Tighten loose screw joints in a clockwise direction. Ensure that the torques are correct.
   - ➔ Have loose screw joints checked by your dealer if you lack the necessary expertise and the tools required.

14.6 Saddle

- ➔ Check whether you can twist the saddle.
  - ➔ If you can twist the saddle, tighten the seat post clamp. Observe applicable torques.
  - ➔ Have the seat post clamp checked by your dealer if you lack the necessary expertise and the tools required.
  - ➔ If there is a quick release installed on the seat post clamp, adjust the quick release (see the "Basic adjustments / Quick releases" chapter).
- ➔ Check whether you can move the saddle horizontally in the direction of travel or in the opposite direction.
  - ➔ If you can move the saddle, adjust the saddle clamp (see the "Basic adjustments / Saddle / Adjusting the reach" chapter).

14.7 Handlebars and handlebar stems

Vehicles with a special type of stem are accompanied by a separate description of the stem, which must be observed.

- ➔ Check whether the handlebars are aligned perpendicularly to the front wheel (see "Illustr.: Correct handlebar alignment").
  - ➔ Readjust the handlebars if they are not perpendicular to the front wheel (see the "Basic adjustments / Handlebars and handlebar stems / Aligning the handlebars" chapter).

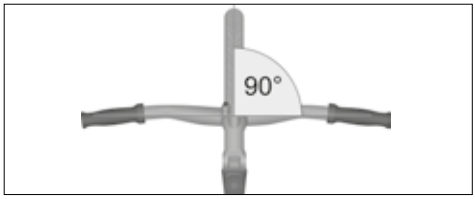

Illustr.: Correct handlebar alignment (example)

- Fix the front wheel in place by clamping it between your legs to prevent it twisting sideways, and check whether the handlebars can be turned relative to the front wheel. Ensure that you do not touch hot brake discs.
- If you can turn the handlebars, have them adjusted by your dealer.

- Check whether the handlebar stem can be moved up and down.
  - If you detect play in the head tube or handlebar stem when pulling the handlebar stem up and down, have the bearing play or the handlebar stem adjusted by your dealer.
- Check the handlebars and handlebar stem for cracks, deformation or discolouration.
  - If the handlebars or handlebar stem are cracked, deformed or discoloured, stop using the cycle and contact your dealer.

14.8 Adjusting the headset

CAUTION

Unexpected cycle behaviour due to incorrect adjustment.

Risk of accident and injury!

- Observe applicable torques.
- Observe the minimum insertion depth for the handlebar stem.

CAUTION

Risk of burning due to hot brake discs.

Risk of injury!

- Let the brake discs cool down before maintenance.

In a traditional internal clamping mechanism for the handlebar stem, the bearing race is secured with a washer and lock nut.

In a non-threaded external clamping mechanism, the bearing race is secured by the handlebar stem itself.

There is very little play when adjusting the headset. The bearings can easily become blocked or damaged.

Special tools are required to adjust headsets.

- Refer to and follow information from the headset manufacturer.
- If you lack the necessary expertise and the tools required to adjust the headset, contact your dealer.

Excessive tightness can damage the headset and block the steering movement, which negatively affects handling characteristics.

14.8.1 Conventional handlebar stem with an internal clamping mechanism

If there is too much play in the headset, follow the steps described below:

1. Loosen the upper lock nut.
2. Turn the bearing race underneath slightly clockwise.
3. Tighten the upper lock nut. Observe the permitted torque.
4. Check the headset play.
   - If there is still play in the headset, repeat steps 1 to 4.
5. Check whether the handlebar stem is secure by fixing the front wheel in place between your legs and attempting to turn the handlebars relative to it.

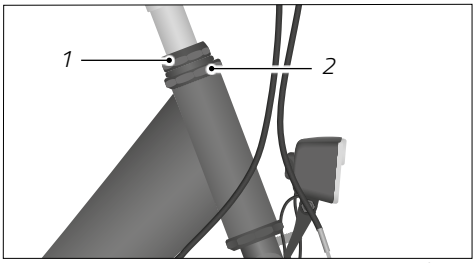

Illustr.: Internal clamping mechanism (example)

1 Lock nut

2 Bearing race

6. Check the handlebar position after adjusting the headset (see the “Basic adjustments / Handlebars and handlebar stems / Aligning the handlebars” chapter).

14.8.2 Handlebar stem with an external clamping mechanism

1. Unfasten the clamp bolts on the side of the handlebar stem.
2. Remove the cap from the head of the inner adjustment screw, if necessary.
3. Tighten the inner adjustment screw further by turning it a fraction clockwise if there is a lot of play in the headset.
4. Align the handlebar stem so that the handlebars are perpendicular to the front wheel.
5. Re-tighten the clamp bolts with the permitted torque.

6. Check the headset play by placing two fingers around the upper head bearing race, pulling the front brake and pushing the cycle forwards and backwards. The fork stem must not move in the head tube as you do this.
   - ➔ If there is still play in the headset, repeat steps 1 to 5.
7. Check how freely the handlebars move. If the steering is heavier than before, then the headset adjustment screw is too tight. Start again at step 1 and turn the inner adjustment screw a fraction anticlockwise.

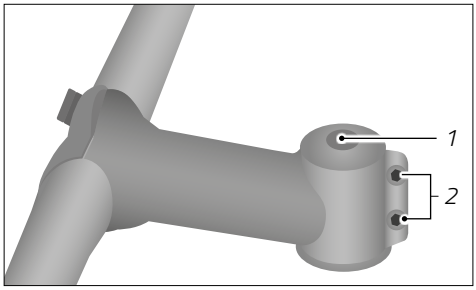

Illustr.: External clamping mechanism (example)

1 Inner adjustment screw

2 Clamp bolts

8. Check whether the handlebar stem is secure by fixing the front wheel in place between your legs and attempting to turn the handlebars relative to it.
9. Check the handlebar position after adjusting the headset (see the "Basic adjustments / Handlebars and handlebar stems / Aligning the handlebars" chapter).

14.9 Wheels

- ➔ Check whether the front or rear wheel can be moved sideways, and whether the wheel nuts move.
  - ➔ If the wheel nuts move, have the screw joints checked by your dealer.
  - ➔ If the quick-release axle moves, adjust the axle (see the "Wheels and tyres / Fitting and removing the front/rear wheel" chapter).
  - ➔ If the front or rear wheel moves sideways, have the wheel repaired by your dealer.
- ➔ Check whether there is equal distance on both sides between the front wheel and the front fork or between the rear wheel and the frame.
  - ➔ If the distances are not equal, have the front or rear wheel checked by your dealer.
- ➔ Lift the cycle and turn the front or rear wheel. Check whether the front or rear wheel swings sideways or outwards.
  - ➔ If the front or rear wheel swings sideways or outwards, have the wheel checked by your dealer.

14.9.1 Rims and spokes

- Check the front and rear rims at regular intervals for cracks, deformation or colour changes.
- Check the rim also under the inner tube and under the rim tape.
  - Do not use the cycle if a rim is cracked, deformed or discoloured.
  - Have the rim checked by your dealer.

Especially with hollow chamber rims and rims made of composite materials and aluminium, damage can occur that is not visible.

- Squeeze the spokes together gently with your thumb and fingers, checking whether the tension is the same for all spokes.
  - If the tension varies or spokes are loose, have the spokes tensioned by your dealer.

14.9.2 Rim wear indicator with rim brakes

The wear indicator is a groove in the surface of the rim where the brake pads are pressed. The wear limit is reached when the surface groove can no longer be felt, i.e. has been worn away through braking.

- Check whether there is a wear indicator on the rims of your cycle (see "Illustr.:Rim with a wear indicator").

1. If your cycle rims have an indentation, check whether the wear limit has been reached.
2. Stroke your fingernail vertically across the indentation.
   - If you cannot feel the indentation, do not use the cycle.
   - Have the rims replaced by your dealer.

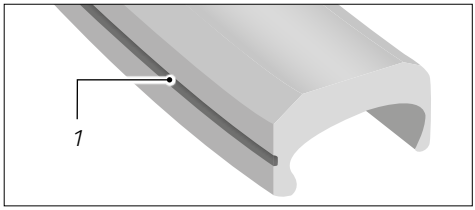

Illustr.: Rim with a wear indicator (example)

1 Indentation

14.9.3 Tyres

1. Check whether the tyre pressure is correct (see the “Wheels and tyres / Tyres and valves / Tyre pressure” chapter).
2. Check the tyres for cracks and damage from foreign bodies.
3. Check whether you can clearly feel the tyre tread.
   - ➔ If a tyre is cracked or damaged, or the tread depth is too low, have the tyre replaced by your dealer.

The following sentence is only applicable for Europe:

   - ➔ On an S-pedelec, ensure that the profile depth does not fall below 1 mm.
4. Check whether the valves are firmly in place and tighten the lower knurled nut if necessary by turning it clockwise.
5. Check whether the valves have a protective cap.
   - ➔ Replace missing protective caps so that dust and dirt cannot get into the valves.

14.10 Flat tyre

A flat tyre is the most frequent cause of cycling breakdowns. A flat tyre need not end your ride if you carry the necessary tools and a replacement inner tube or repair kit.

For detailed instructions on repairing a flat tyre, see the “Maintenance / Removing the wheel” chapter.

14.11 Removing the wheel

Before you remove a wheel, read the “Wheels and tyres” chapter. If you lack the necessary expertise and the tools required, contact your dealer.

- ➔ On cycles with a derailleur shifting system, shift to the smallest sprocket in the cassette at the back. This will position the rear derailleur on the outside and prevent it hindering the removal process.
- ➔ To facilitate wheel removal, fix the cycle in place using a suitable work stand if necessary.

14.11.1 Preparing the brakes

CAUTION

Risk of burning due to hot brake discs.

Risk of accident and injury!

- Let the brake discs cool down before removing the wheel.

NOTE

Locked up brake pads due to operating the disc brake incorrectly.

Risk of damage!

- Never pull the brake lever when a wheel is removed. Always use the transport locks when you remove a wheel.

Before the wheels can be removed, the brakes must be prepared.

Refer to the information enclosed by the brake and shifting system manufacturers.

14.11.1.1 Preparing mechanical rim brakes

1. Detach the brake cable from the brake arm.
2. Reach around the wheel with one hand and press the brake pads or brake arms together. This position allows you to easily detach the cable nipple (normally cylindrical) or V-brake outer cable.

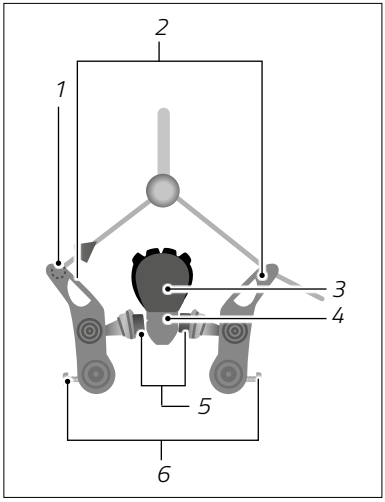

Illustr.: Rim brake with a cable nipple (example)

1 *Cable nipple*
2 *Brake arm*
3 *Tyre*
4 *Rim*
5 *Brake block holders*
6 *Spring preload adjustment screw*

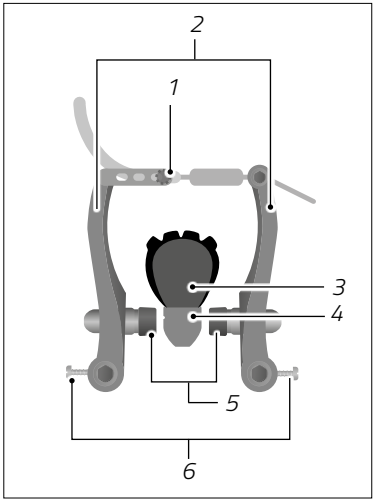

Illustr.: Rim brake with cable guide (example)

1 *Cable guide*
2 *Brake arm*
3 *Tyre*
4 *Rim*
5 *Brake block holders*
6 *Spring preload adjustment screw*

14.11.1.2 Preparing hydraulic rim brakes

- To open the quick-release lever for hydraulic rim brakes, flip the quick-release lever down (see "Illustr.: Preparing hydraulic rim brakes").
- Pull the brake from the retaining boss.

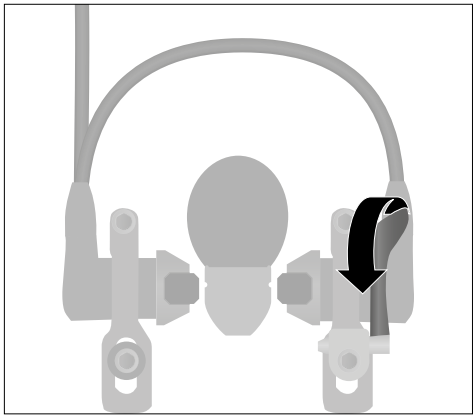

Illustr.: Preparing hydraulic rim brakes (example)

14.11.1.3 Preparing the coaster brake

- With coaster brakes, loosen the screw joint between the reaction arm and the chain stays.
  - Remove the shift cables or shift box before removing the wheel. Refer to information from the manufacturer about fitting and removal.

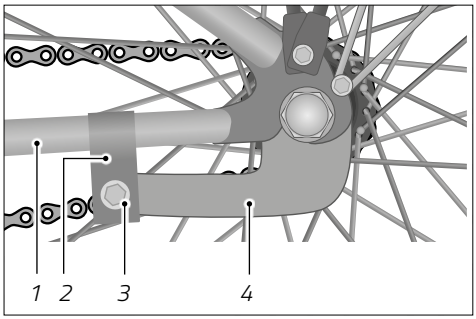

Illustr.: Coaster brake (example)

1 Chain stays

2 Fastening clamp on the frame

3 Screw joint

4 Coaster brake reaction arm

14.11.1.4 Preparing the brakes on racing bikes

Before the wheels can be removed, the brakes must be prepared.

- Open the quick-release lever on the rim brake.

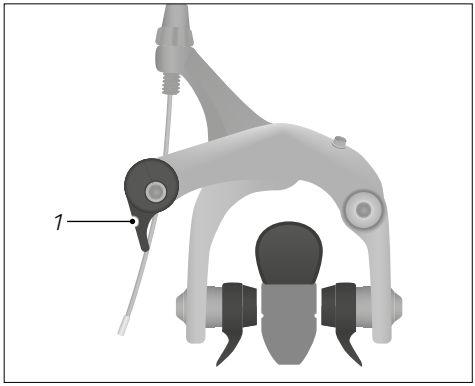

Illustr.: Preparing the brakes on racing bikes (example)

1 Rim brake quick-release lever

14.11.2 Removing the front wheel

- Open the quick-release lever (see the "Wheels and tyres / Fitting and removing the front/rear wheel" chapter) or loosen the cap nuts.

If the front wheel cannot be pulled out yet, this is due to the drop-out locks. These are retaining collars in the fork end.

- Unfasten the cotter pin nut on the quick release or unscrew the cap nut further from the axle.
- Slip the front wheel from the drop-out locks.

14.11.3 Removing the rear wheel

- On cycles with a derailleur shifting system, shift to the smallest rear sprocket.
- To facilitate rear wheel removal with derailleur shifting systems, pull the rear derailleur backwards slightly by hand (see "Illustr.: Pulling back the rear derailleur").
- Lift the cycle up a little and give the rear wheel a light tap so that it drops down and out.

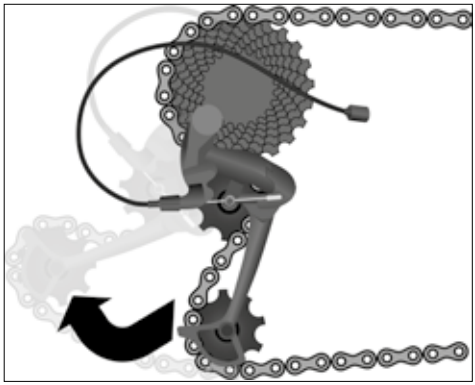

Illustr.: Pulling back the rear derailleur (example)

If the cycle is equipped with a rear derailleur that features a chain adjuster lock:

- Use the lever on the top of the rear derailleur to deactivate the derailleur before removing the rear wheel.

If the cycle has thru-axles, refer to the "Wheels and tyres / Fitting and removing the front/rear wheel" chapter.

- Have your dealer explain how to use thru-axles if necessary.

If the cycle has a combination of hub and derailleur shifting systems, then the shift box must be removed first before removing the rear wheel as with a derailleur shifting system.

- Refer to information from the manufacturer about fitting and removing the shift box.
- Have the shift box fitted and removed by your dealer if you lack the necessary expertise and the tools required.

14.11.4 Removing clincher or folding tyres

NOTE

Damage to the inner tube due to a ruined or worn tyre.

Risk of damage!

➔ If the fabric of a tyre has been ruined by a foreign body or wear, replace the tyre.

To remove clincher or folding tyres, follow these steps:

1. Unscrew the valve cap and lower knurled nut from the valve (see “Illustr.:Removing clincher or folding tyres (A)”).
2. Completely deflate the inner tube.
3. Press the tyre from the rim sidewall towards the centre of the rim around the entire circumference of the tyre.
4. Push one tyre lever between the tyre and rim approximately 5 cm/2.0" to the right of the valve.
5. Lever the sidewall of the tyre over the edge of the rim and hold the tyre lever firmly in this position.
6. Push the second tyre lever between the tyre and rim approximately 5 cm/2.0” to the left of the valve (see “Illustr.: Removing clincher or folding tyres (B)”).
7. Lever the sidewall of the tyre over the edge of the rim with the second tyre lever.
8. Push the second tyre lever along the rim to completely release the rim sidewall.

If you are repairing the tyre while out riding:

1. Pull the inner tube out of the clincher or folding tyre (see “Illustr.:Removing clincher or folding tyres (C)”) without fully removing it from the tyre.
2. Inflate the inner tube and try to locate the leak by sound and feel.
3. Check the tyre for foreign bodies and remove them.
4. Repair the inner tube using a repair kit. Refer to the tyre repair information enclosed by the manufacturer.

If you are repairing the tyre at home:

1. Pull the inner tube out of the clincher or folding tyre (see "Illustr.:Removing clincher or folding tyres (C)").
2. Inflate the inner tube and immerse it in water to locate the leak by seeing where bubbles escape.
3. Repair the inner tube using a repair kit. Refer to the tyre repair information enclosed by the manufacturer.
   - ➔ If the inner tube is beyond repair, insert a new one.
4. Check the tyre for foreign bodies and remove them.
   - ➔ Replace the tyre if it is too badly damaged.

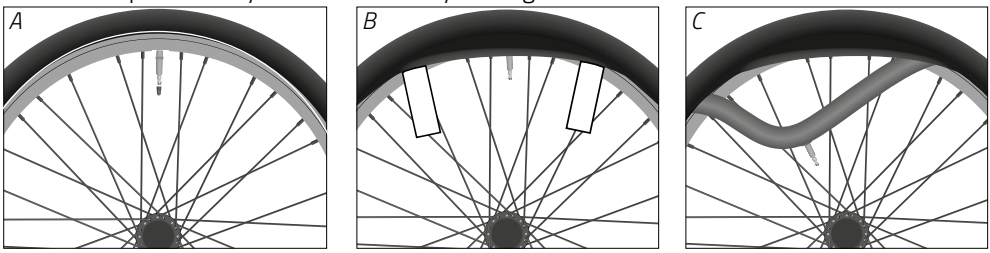

Illustr.: Removing clincher or folding tyres (example)

14.11.5 Checking the rim tape

NOTE

Damage to the inner tube due to damaged or poorly fitting rim tape.

Risk of damage!

- ➔ Align the rim tape so that all the spoke nipples and spoke holes are covered.
- ➔ Replace the rim tape if its fabric is torn or damaged.

On rims with a double base, known as hollow section rims, the rim tape must span the entire base without being so wide that it protrudes at the edges of the rim.

- ➔ If you lack the necessary expertise and the tools required, have your dealer check the rim tape and replace it if necessary.
- ➔ When you have removed the tyre, check the rim tape and replace it if necessary to prevent damage to the inner tube.

14.11.6 Fitting clincher or folding tyres

When fitting a tyre, ensure that no foreign bodies such as dirt or sand get inside and that you do not damage the inner tube.

To fit clincher or folding tyres, follow these steps:

1. Place one edge of the rim inside the tyre.
2. Press the sidewall of the tyre fully over the edge of the rim with your thumbs.
3. Insert the inner tube valve vertically through the valve hole in the rim so that it points directly at the wheel axle.
4. Inflate the inner tube slightly so that it becomes round, and place it completely inside the tyre.
5. Use your thumbs to press the tyre over the edge of the rim as far as it will go.
6. Push the inner tube inside the tyre with your index fingers so as not to trap the inner tube between the tyre and the rim.
7. Work your way evenly around the circumference of the tyre from both sides.
8. Finish by giving the tyre a firm tug downwards to move the previously fitted section down into the deep rim base.
9. Check the position of the inner tube and press the tyre over the edge of the rim (see "Illustr.: Fitting clincher or folding tyres (A)").
   - ➔ If this is not possible, use the blunt end of the tyre lever to move the tyre over the edge of the rim (see "Illustr.:Fitting clincher or folding tyres (B)").
10. Press the valve into the inside of the tyre.
11. Realign the valve if necessary.
    - ➔ If this is not possible, detach part of the tyre sidewall and realign the inner tube.
12. Move the semi-inflated tyre back and forth several times in a sideways direction to check that the inner tube is positioned in the tyre correctly with no pinching.
13. Inflate the inner tube to the desired tyre pressure. The maximum tyre pressure is indicated on the sidewall of the tyre.

14. Check whether the tyre is correctly positioned using the witness line alongside the rim sidewall. The witness line must be an even distance from the edge of the rim all round the tyre (see "Illustr.: Fitting clincher or folding tyres (C)").

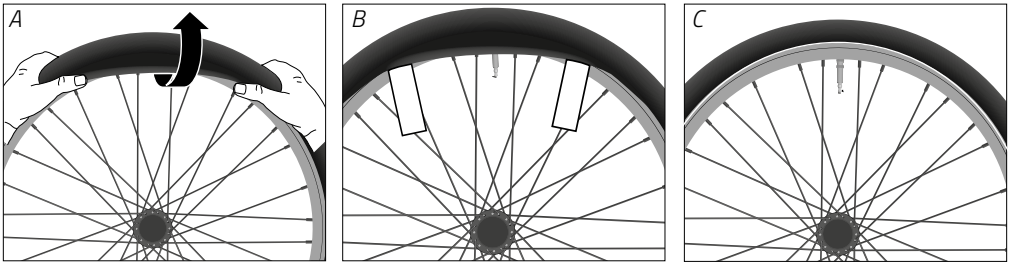

Illustr.: Fitting clincher or folding tyres (example)

14.11.7 Fitting UST tyres

No separate inner tube is needed with UST (universal system tubeless) tyres. The tyre and rim are connected in such a way that no air can escape.

UST tyres may only be used with a UST rim or a UST wheel. Have UST tyres fitted by your dealer only. Do not fit UST tyres yourself unless you have the necessary expertise.

- ➔ Only fit UST tyres by hand. Do not use a tyre lever.
- ➔ Remove dirt and lubricant before fitting. UST tyres must be free of dust and grease inside and around the tyre bead.
- ➔ Moisten the tyre bead with soap or tyre fitting lubricant before fitting so as not to damage the UST tyre.

1. Using your hands, press the UST tyre onto the rim from outside.
2. First lift one tyre bead completely over one rim flange, then the other.
3. Centre the UST tyre in the rim well.
4. Centre the valve between the tyre sidewalls. Inflate the UST tyre to the maximum tyre pressure.
5. Check whether the UST tyre is correctly positioned using the fine witness line, which must be an even distance from the rim all around the UST tyre.
   - ➔ Use the valve to reduce the tyre pressure if necessary.

14.11.8 Fitting the wheel

WARNING

Brake failure due to fitting the brake incorrectly.

Risk of accident and injury!

- With rim brakes, reattach the brake cable immediately.
- With hydraulic rim brakes, reattach the brake body immediately and close the quick-release lever.
- Ensure that the brake body touches the rim and not the tyre or the spokes.

To fit the wheels, reverse the sequence of steps for removing the wheels.

- With disc brakes, check that the brake pads are precisely positioned in the mounts on the brake calliper before fitting the wheel.
- Ensure that you push the brake disc between the brake pads.

14.11.8.1 Fitting the front wheel

1. Thread the front wheel through the drop-out locks.
2. Fasten the nut on the quick release.
3. Close the quick-release lever.
4. Check whether the front wheel turns smoothly.

- If the front wheel does not turn smoothly, centre the wheel in the suspension fork.

14.11.8.2 Fitting the rear wheel

1. Pull the rear derailleur backwards by hand (see the “Maintenance / Removing the wheel / Removing the rear wheel” chapter).
2. Place the chain on the smallest chainring and press the chain down.
3. Thread the rear wheel through the drop-out locks if necessary.
4. Push the rear wheel up into the drop-out locks.
5. Fasten the nut on the quick release.
6. Close the quick-release lever.
7. Check whether the rear wheel turns smoothly.

- If the rear wheel does not turn smoothly, centre the wheel between the chain stays.

If the cycle is equipped with a rear derailleur that features a chain adjuster lock:

- Use the lever on the top of the rear derailleur to activate the derailleur once you have fitted the rear wheel.

14.11.8.3 After fitting the wheels

WARNING

Brake failure due to fitting the brake incorrectly.

Risk of accident and injury!

- Before the first ride after fitting a wheel, check whether there is any grease or other lubricant residue left on the brake bodies from the fitting process.
- Remove grease or other lubricant residue from the brake bodies if necessary.
- Ensure that the brake bodies meet the braking surfaces.

- If applicable, remove the transport lock before fitting.
- Pull the brake lever – several times in the case of disc brakes – and turn the wheel.
- Ensure that the brake bodies do not grind against the braking surfaces.

14.12 Brake system

WARNING

Brake failure due to incorrectly adjusted brakes.

Risk of accident and injury!

- Have brake adjustments carried out by your dealer only.
- Do not make any adjustments to the brakes if you lack the necessary expertise or the tools required.

The following chapter will describe adjustments to a selection of brake systems. Adjustment and operation may vary depending on the brake type and model.

- Note that a brake system is a complex system. Adjustments to individual parts of the brake system affect each other.
  - Have your dealer carry out adjustments.
  - Refer to and follow information from the component manufacturer.
- Test the functionality of the brake system after making adjustments.
  - Operate the brake and push the cycle in the direction of travel. Check whether the associated wheel is braked.
  - Lift the cycle and turn the wheel. Listen for grinding noises.
  - Have the brakes checked if you hear grinding noises.
  - If the brakes are not functional, the cycle must not be used.
  - Have non-functional brakes repaired or replaced by your dealer.

14.12.1 Rim brakes in general

The following instructions apply to mechanical and hydraulic rim brakes.

14.12.1.1 Checking a brake pad

NOTE

Damage to the rim by the brake block holder due to worn brake pads.

Risk of damage!

- Immediately replace the brake pad, or the brake block holder if necessary, when pads are worn.
- Contact your dealer if you lack the necessary expertise and the tools required to replace the brake pads, or the brake block holders if necessary.

NOTE

Damage to tyres or spokes due to incorrectly adjusted brake block holders.

Risk of damage!

- Adjust the brake block holder so that it is parallel to the rim.

The brake pads must be changed before the wear indicator on the pad is reached.

Have your dealer replace the brake pads, or brake block holders if necessary, and readjust the brake system afterwards.

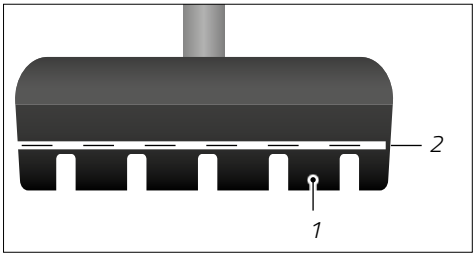

Illustr.: Brake block holder with a wear indicator (example)

1 Brake pad

2 Wear indicator

14.12.1.2 Changing a brake pad

WARNING

Reduced brake force due to uneven wear on the brake pads.

Risk of accident and injury!

- Always replace brake pads in pairs.
- Make identical adjustments to brake block holders that belong together.
- If you lack the necessary expertise and the tools required to replace the brake block holders, contact your dealer.

Replacement may involve changing the entire brake block holder or just the brake pad, depending on the brake design.

- Only install brake pads that fit your rim. Consult your dealer.
- If the entire brake block holder needs to be changed, follow the relevant instructions (see the “Maintenance / Brake system / Mechanical rim brake” chapter or “Maintenance / Brake system / Hydraulic rim brake” chapter).

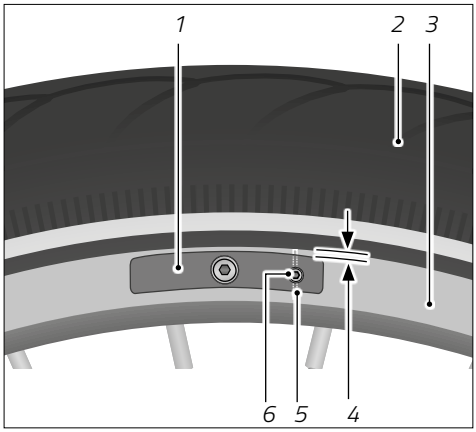

Illustr.: Brake pad with a screw or pin (example)

1 *Brake block holder and brake pad*
2 *Tyre*
3 *Rim*
4 *Distance between brake pad and tyre*
5 *Brake pad fastening pin*
6 *Brake pad fastening screw*

14.12.1.3 Changing a screw-type brake pad

1. Loosen the brake pad fixing screw by turning it anticlockwise.
2. Pull the used brake pad out of the brake block holder counter to the direction of travel.
3. If applicable, follow the specification on the new brake pads regarding the direction of travel or note the screw recess.
4. Push the new brake pad into the brake block holder.
5. Tighten the brake pad fixing screw by turning it clockwise, observing the applicable torque.

14.12.1.4 Changing a brake pad with a fixing pin

1. Pull the fixing pin out of the used brake pad.
2. Pull the used brake pad out of the brake block holder counter to the direction of travel.
3. Note the recess for the fixing pin.
4. Push the new brake pad into the brake block holder.
5. Push the fixing pin fully into the brake pad.

14.12.1.5 Changing the brake block holders on a racing bike

In order to change the brake block holders, the quick-release lever on the brake must generally be opened. The position of the quick-release lever may vary depending on the brake design.

WARNING

Lack of brake functionality when the quick-release lever is open.

Risk of accident and injury!

- Only operate the quick-release lever when you are removing wheels or changing brake block holders.
- Check the quick-release lever before every ride.
- Close the quick-release lever after maintenance work.

1. Open the quick-release lever (see “Illustr.: Preparing the brake”).

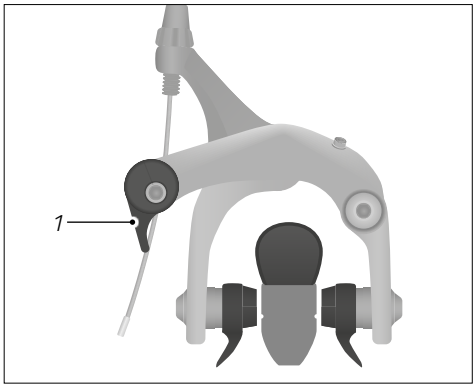

Illustr.: Preparing the brake

1 Rim brake quick-release lever

2. Remove the wheel (see the “Maintenance / Removing the wheel” chapter).
3. Loosen the brake block holder screw joint in an anticlockwise direction.
4. Remove the used brake block holders.
5. If applicable, follow the specification on the brake block holders regarding the direction of travel and insert the new brake block holders.
6. Hand-tighten the brake block holder screw joint in a clockwise direction.
7. Align the brake block holders parallel to the rim so that the distance between the upper edge of the brake block holder and the tyre is 2 mm/0.08” (see “Illustr.: Brake block holder alignment”).
8. Close the quick-release lever.
9. Tighten the brake block holder screw joint, observing the applicable torque.
10. To adjust the distance between the brake block holders and the rim so that it is identical on both sides, turn the centring screw.
11. Adjust the distance between the brake block holders and the rim to 1–2 mm/0.04–0.08" (see “Illustr.: Racing bike rim brake”).

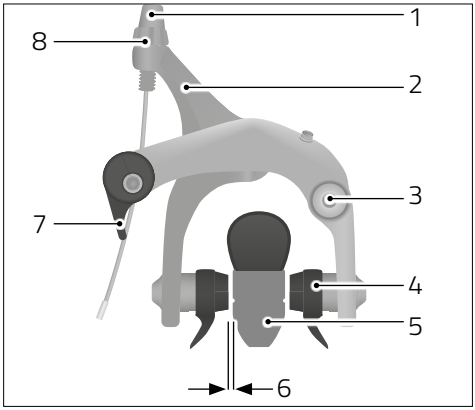

Illustr.: Racing bike rim brake (example)

1 *Knurled screw*
2 *Brake arm*
3 *Centring screw*
4 *Brake block holder and brake pad*
5 *Rim*
6 *Distance between the brake block holder and rim*
7 *Quick-release lever*
8 *Lock nut*

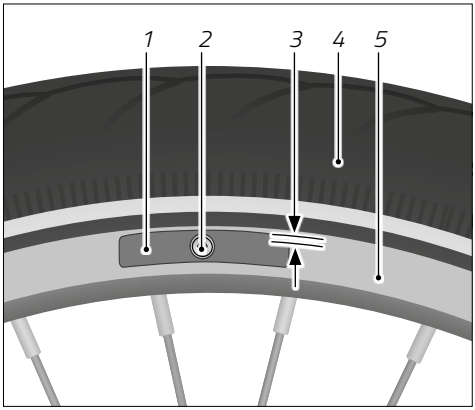

Illustr.: Brake block holder alignment (example)

1 *Brake block holder*
2 *Brake block holder screw joint*
3 *Distance between the brake block holder and tyre*
4 *Tyre*
5 *Rim*

14.12.1.6 Adjusting brake pad distance on a racing bike

The distance between the rim and brake pad is adjusted to 1–2 mm/0.04–0.08".

1. Turn the centring screw until the distance between the two brake pads is equal.
2. Loosen the hub lock nut by giving it one turn (see “Illustr.: Racing bike rim brake”).
3. Tighten or loosen the knurled screw until the distance between the brake pads and the rim is 1–2 mm/0.04–0.08".
4. Tighten the lock nut.

14.12.2 Mechanical rim brake

14.12.2.1 Changing a brake block holder

WARNING

Reduced brake force due to uneven wear on the brake pads.

Risk of accident and injury!

- Always replace brake pads in pairs.
- Make identical adjustments to brake block holders that belong together.
- If you lack the necessary expertise and the tools required to replace the brake block holders, contact your dealer.

The brake cable is generally fastened to the brake with a cylindrical cable nipple. If the brake cable is screwed to the brake arms, contact your dealer.

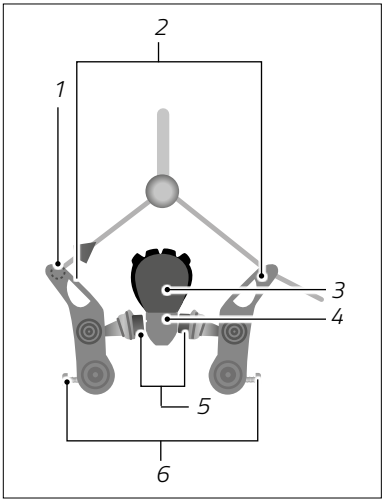

Illustr.: Rim brake with a cable nipple (example)

1 *Cable nipple*
2 *Brake arm*
3 *Tyre*
4 *Rim*
5 *Brake block holders*
6 *Spring preload adjustment screw*

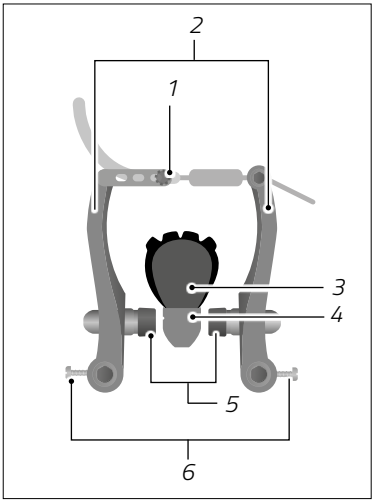

Illustr.: Rim brake with cable guide (example)

1 *Cable guide*
2 *Brake arm*
3 *Tyre*
4 *Rim*
5 *Brake block holders*
6 *Spring preload adjustment screw*

Press both brake block holders against the rim and detach the brake cables.

- ➔ If this is not possible, loosen the brake cable tension lock nut and turn the knurled screw clockwise until the brake arms can be squeezed together enough to detach the brake cable.

1. Loosen the brake block holder screw joint in an anticlockwise direction (see “Illustr.: Brake block holder alignment”).
2. Pull the brake arms apart and remove the used brake block holders. If applicable, note the order of the spacing washers.
3. Clean the brake with a clean cloth.
4. If applicable, follow the specification on the brake block holders regarding the direction of travel and follow the order of the spacing washers. Insert the new brake block holders.
5. Hand-tighten the brake block holder screw.

6. Press the brake arms against the rim and align the brake block holders parallel to the rim.
7. Move the brake block holders until the distance between the upper edge of the brake block holders and the tyre is 2 mm/0.08" (see “Illustr.: Brake block holder alignment”).
8. Attach the brake cable.
   - ➔ If this is not possible, loosen the brake cable tension lock nut and turn the knurled screw clockwise until the brake arms can be squeezed together enough to attach the brake cable.
9. Fix the brake block holders in place by operating the brake lever and tighten the brake block holder screw joint, observing the applicable torque.

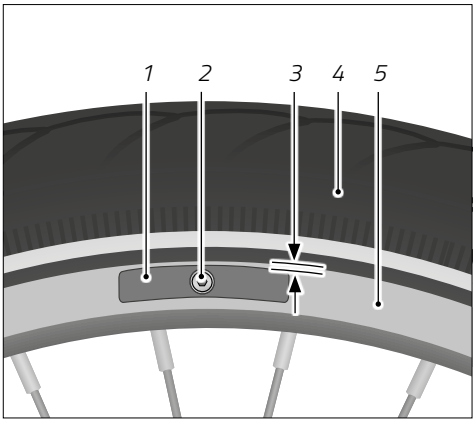

Illustr.: Brake block holder alignment (example)

1 Brake block holder

2 Brake block holder screw joint

3 Distance between the brake block holder and tyre

4 Tyre

5 Rim

14.12.2.2 Adjusting the brake block holder distance

The distance between the rim and brake pads is adjusted to 1–2 mm/0.04–0.08", and must be equal on both sides. If the distances are different, the spring preload is adjusted. If the distance from the rim to one of the two brake block holders is decreased, the distance to the opposite brake block holder is increased.

- To increase the distance to a brake block holder, turn the spring preload screw clockwise.
- To decrease the distance to a brake block holder, turn the spring preload screw anticlockwise.

14.12.2.3 Checking the brake system

- Check the entire brake system for wear, dirt and damage.
- Carry out a stationary functionality test.

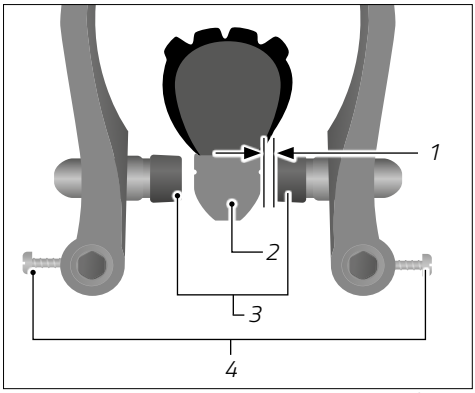

Illustr.: Brake block holder distance (example)

1 Distance between the rim and brake pad

2 Rim

3 Brake block holders

4 Spring preload screw

14.12.3 Hydraulic rim brake

WARNING

Possible loss of eyesight on contact with brake fluid.

Risk of accident and injury!

- Wear protective gloves and safety goggles when carrying out maintenance work on a hydraulic rim brake.
- If brake fluid gets in your eye, rinse it out with clean water straight away.
- Contact a doctor immediately after contact with brake fluid.

CAUTION

Loss of force in the hydraulic brake system.

Risk of accident and injury!

- Have the brake fluid changed regularly by your dealer.
- Refer to and follow specifications from the manufacturer regarding brake fluid changes.

NOTE

Damage to tyres or spokes due to incorrectly fitted brake pads.

Risk of damage!

- Align the brake pads parallel to the rim.

14.12.3.1 Changing the brake block holders

Replacement may involve changing the entire brake block holder or just the brake pad, depending on the brake design. If only changing the brake pad, follow the instructions in the "Maintenance / Brake system / Rim brakes in general / Changing a brake pad" chapter. The brake block holders are generally fastened to the brake with a clip-type mechanism.

1. Open the quick-release lever on the brake.
2. Remove this side of the brake from the brake mount on the front fork or frame.
3. Remove the wheel (see the "Wheels and tyres" chapter).
4. Pull the brake block holders out of the brake.

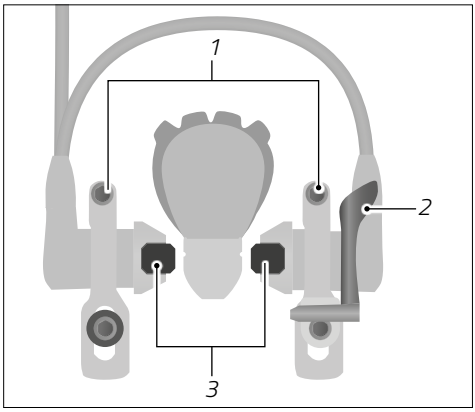

Illustr.: Hydraulic rim brake (example)

1 Retaining bolts for the brake piston clamps

2 Quick-release lever

3 Brake block holder

5. If applicable, note the direction of travel and insert the new brake block holders. The brake block holders will engage with an audible click.
6. Fit the wheel.
7. Put the previously removed side of the brake back on the brake mount and loosen the retaining bolts for the brake piston clamps.
8. Carefully operate the brake lever and align the brake block holders parallel to the rim so that the distance between the upper edge of the brake pads and the tyre is 2 mm/0.08".
9. Close the quick-release lever on the brake.
10. Operate the brake lever several times until the usual pressure point is reached.

14.12.3.2 Adjusting brake block holder distances (Magura HS models)

The following describes how to adjust brake block holder distances, using the example of a Magura HS.

The distance between the rim and brake block holder is adjusted to 1–2 mm/0.04–0.08".

1. Loosen the pressure point adjustment screw on the brake lever by turning it anticlockwise. Ensure that you do not unscrew it completely.
2. Turn the brake boss screw anticlockwise until the brake boss can be moved.
3. Press the brake cylinders and brake block holders against the rim.
4. Align the brake boss so that the brake block holders are parallel to the rim and the distance between the upper edge of the brake pad and the tyre is 2 mm/0.08".
5. Carefully operate the brake lever so that the brake boss does not slip.
6. Slowly release the brake lever until the distance between one brake block holder and the rim is 1–2 mm/0.04–0.08" (see “Illustr.: Hydraulic rim brake”).
7. Hold or fix the brake lever in this position.

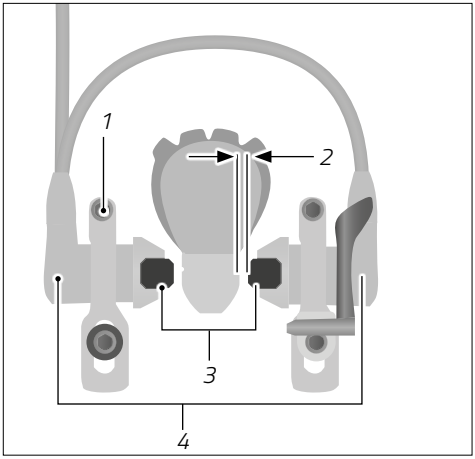

Illustr.: Hydraulic rim brake (example)

1 Brake boss screw

2 Distance between the rim and brake block holder

3 Brake block holders

4 Brake cylinders

8. Tighten the boss screw on the brake block holder by turning it clockwise, observing the applicable torque.
9. Repeat steps 5–8 for the opposite brake pad.
10. Operate the brake lever several times until the usual pressure point is reached.

14.12.3.3 Checking the brake system

- Check the entire brake system for leaks, dirt and damage.
- Check the rims for dirt and wear.
- Carry out a stationary functionality test.

14.12.4 Disc brake

WARNING

Possible loss of eyesight on contact with brake fluid.

Risk of accident and injury!

- Wear protective gloves and safety goggles when carrying out maintenance work on a hydraulic disc brake.
- If brake fluid gets in your eye, rinse it out with clean water straight away.
- Contact a doctor immediately after contact with brake fluid.

CAUTION

Loss of force in the hydraulic brake system.

Risk of accident and injury!

- Have the brake fluid changed regularly by your dealer.

Disc brakes centre themselves automatically. Adjustments to disc brakes are generally unnecessary. The brake must be readjusted or the brake disc trueness checked in case of doubt if grinding noises are produced.

The maintenance work for mechanical and hydraulic disc brakes is largely identical.

- Refer to the notes in this chapter for details specific to hydraulic brakes.
- If you lack the necessary expertise and the tools required to adjust disc brakes, contact your dealer.

14.12.4.1 Bedding in a disc brake

The disc brake bedding-in process may be carried out in various ways depending on the brake pad material.

- Refer to the information enclosed by the manufacturer about the brake pads.

14.12.4.2 Checking the brake disc

The minimum thickness of the brake disc is generally shown on the disc.

- Check the brake disc thickness with a measuring calliper.
- Check the brake disc for dirt.
- Check the brake disc trueness.

14.12.4.3 Adjusting the pressure point

- More information about adjusting the pressure point can be found in the “Brake / Adjustments / Adjusting the pressure point” chapter.

14.12.4.4 Adjusting the brake calliper

1. Turn the brake calliper screws anticlockwise until the brake calliper can be moved.
2. Pull the brake lever for the brake that is to be adjusted, and hold this position.
3. Turn the brake calliper screws clockwise until the brake calliper can no longer be moved.
4. Release the brake lever.
5. Tighten both brake calliper screws, observing applicable torques.

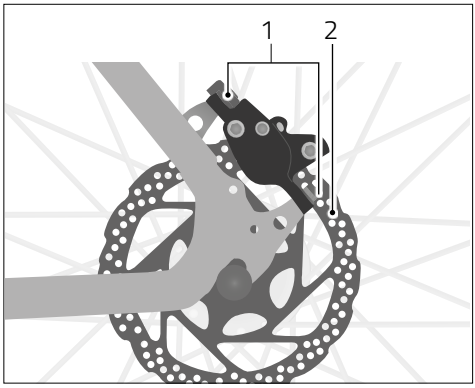

Illustr.: Disc brake (example)

1 Brake calliper screw

2 Brake disc

14.12.4.5 Changing brake pads

NOTE

Uneven brake pad wear due to changing the brake pads incorrectly.

Risk of damage!

- Always change brake pads in pairs.
- Use brake pads of the same type.
- Adjust the brakes after every change.

NOTE

Loss of brake fluid and damage to the brake due to operating the brake lever when the brake pads or wheels are removed.

Risk of damage!

- Never operate the brake lever while the wheel, brake block holders or brake pads are removed.

1. Remove the wheel (see the “Wheels and tyres / Fitting and removing the front/rear wheel” chapter).
2. Remove the circlip from the screw and loosen it, or bend the ends of the pin together and pull it out.

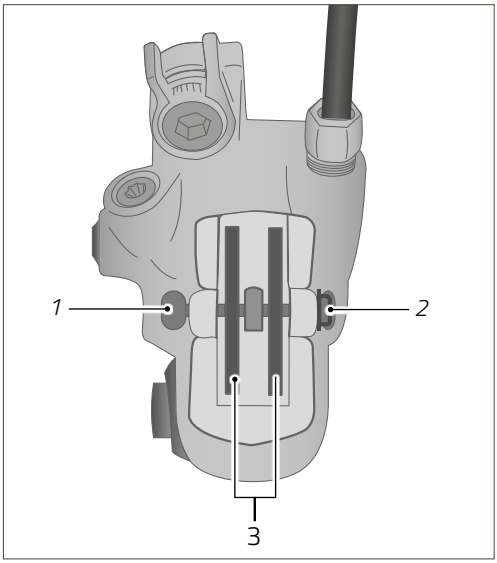

Illustr.: Brake calliper with a screw (example)

1 Brake pad screw

2 Screw circlip

3 Brake pads

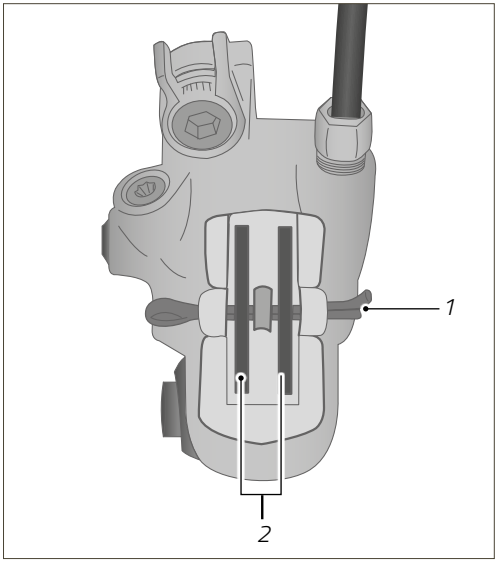

Illustr.: Brake calliper with a pin (example)

1 Pin

2 Brake pads

3. Pull the brake pads out of the brake calliper.
4. Clean the brake pistons with a clean cloth.
5. Press both brake pistons into the brake calliper simultaneously with a brake piston spreader.
6. Remove the used brake pads from the retaining bracket and clean the bracket with a clean cloth.

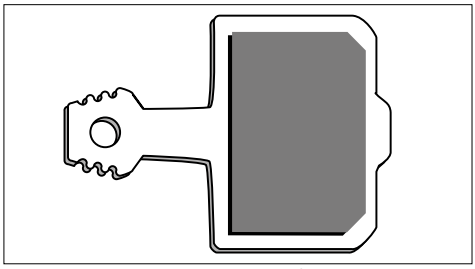

Illustr.: Disc brake pad (example)

7. If applicable, follow the specification on the new brake pads regarding the direction of travel or whether they are for the left or right-hand side, and insert the new brake pads in the brake calliper with the retaining bracket.
8. Push the brake pad screw or pin through the brake pad and holder eyes and into the brake calliper.
9. Tighten the screw, observing the applicable torque, and secure it with the circlip or bend the ends of the pin apart.
10. Fit the wheel.

14.12.4.6 Checking a brake pad

Brake pads must generally be removed in order to check them. The minimum brake pad thickness may vary depending on the brake design.

- Minimum thickness specifications for the brake pads can be found in the information enclosed by the manufacturer.

1. Remove the wheel (see the "Wheels and tyres / Fitting and removing the front/rear wheel" chapter).
2. Remove the circlip from the screw and loosen it, or bend the ends of the pin together and pull it out.
3. Pull the brake pads out of the brake calliper and remove them from the retaining bracket.
4. Check the thickness of the brake pads with a measuring calliper.
   - If the brake pad thickness does not meet the specified minimum thickness, replace the brake pads as described in the previous chapter, "Changing brake pads".

14.12.4.7 Checking the brake system

- Check hydraulic brake systems for leaks, dirt and damage.
- Check mechanical brake systems for damage.
- Carry out a stationary functionality test.

14.12.5 Coaster brake

If it is necessary to back-pedal more than 1/6 of a full pedal revolution before the coaster brake takes effect, then it must be readjusted by your dealer.

WARNING

No coaster brake action where the chain has dropped off the chainring or the reaction arm is loose.

Risk of accident and injury!

- If the coaster brake has no effect, brake carefully using the front brake lever.

- Check the chain tension regularly so that the chain cannot slip off the chainring (see the "Maintenance / Chain tension" chapter).
- Feel the reaction arm and check whether the screw joint is tight against the chain stays.
- If the reaction arm fixing screw is loose, tighten it in a clockwise direction.
- If you lack the necessary expertise and the tools required to fasten the reaction arm, have the coaster brake checked and adjusted by your dealer.

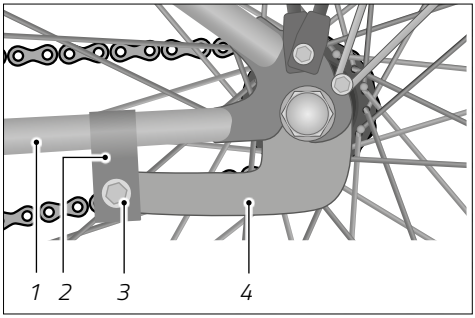

Illustr.: Coaster brake (example)

1 Chain stays

2 Fastening clamp on the frame

3 Screw joint

4 Coaster brake reaction arm

14.13 Crankset

1. Try to move the pedal inwards or outwards from side to side.
   - ➔ Observe whether the crank, bottom bracket or pedal bearing can be moved sideways (see “Illustr.:Crankset using the example of a derailleur shifting system”).
2. Try to move the pedal vertically upwards or downwards.
   - ➔ Observe whether the crank or pedal move vertically in the bottom bracket or pedal bearing.

➔ If the pedal, crank or bottom bracket can be moved sideways or vertically, have the crankset checked by your dealer.

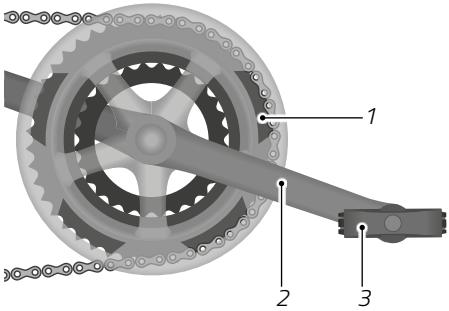

Illustr.: Crankset using the example of a derailleur shifting system (example)

1 Chainring

2 Crank

3 Pedal

14.14 Lighting set

1. Check whether the cable connections to the headlamp, rear lamp and dynamo (if applicable) are firmly in place and look for damage and corrosion.
   - ➔ If the cable connections are damaged, corroded or loose, have the lighting repaired by your dealer.
2. Switch on the lighting and check whether the headlamp and rear lamp are lit. With cycles that have a hub dynamo, turn the front wheel to do this.
3. Check the headlamp adjustment (see the “Basic adjustments / Lighting / Headlamp” chapter).

➔ If you find damage to the lighting set, have it repaired by your dealer.

14.15 Hub dynamo

- Check the cable connections to the hub dynamo.
  - Clean the connectors if necessary.
- Check whether the connectors are tight and look for corrosion.
  - Reconnect if necessary.
- If the cable connections are damaged, have them replaced by your dealer.

14.16 Chain tension

This chapter applies to models with a coaster brake or hub shifting system.

1. Set the cycle on the kickstand.
2. Press the chain upwards or downwards and check whether you can press it through a distance of between 10 and 15 mm/0.4–0.6" (see "Illustr.: Chain tension").
   - If you can press the chain upwards or downwards by less than 10 mm/0.4" or more than 15 mm/0.6", or if the chain is grinding against the all-round chain guard, have the chain tension adjusted by your dealer.

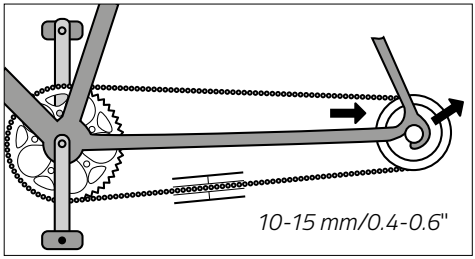

Illustr.: Chain tension (example)

14.16.1 Adjusting the chain tension with hub gears

1. Loosen the screw connection of the rear wheel with a suitable tool. If a coaster brake is installed in the hub, the screw connection of the torque arm to the frame must also be removed.
1. Tension the chain by pulling the rear wheel backwards evenly in the dropout. Make sure that the rear wheel is aligned straight in the frame. The optimum chain tension is achieved when you can push the chain up and down a minimum of 10 mm and a maximum of 15 mm.
1. After adjusting the chain tension, retighten the screws on the rear wheel. If necessary, remount the torque arm of the coaster brake on the frame.

If you do not have the necessary expertise and tools for installation, contact your dealer.

14.16.2 Chain tension in derailleur shifting systems

On cycles with a derailleur shifting system, the chain is tensioned by the chain adjuster on the gear shifting system's rear derailleur.

1. Set the cycle on the kickstand or fix the cycle in place with a suitable work stand and check whether the chain is sagging.
2. Gently press the chain adjuster forwards and check whether it moves back by itself (see "Illustr.: Chain adjuster on the rear wheel").

➔ If the chain is sagging or the chain adjuster does not move back by itself, have the chain adjuster repaired by your dealer.

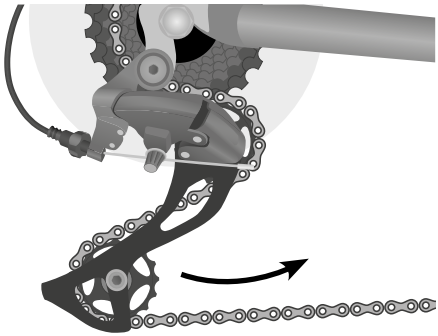

Illustr.: Chain adjuster on the rear wheel (example)

14.16.3 Shift cables

1. Check that the outer casings and inner wires are undamaged.
2. Operate the gear shifting system and check whether the shift cables move freely.
   ➔ Have faulty shift cables replaced by your dealer.

14.16.4 Derailleur shifting system

1. Using a suitable work stand, hang the cycle up by its frame or the seat post.
2. Turn the crankset in the direction of travel.
3. Shift through all the sprockets and chainrings (see the "Derailleur shifting system" chapter).
4. Check that all the gears shift correctly and whether any unusual noises are produced in the process.
   ➔ If the gears do not shift correctly or if you hear unusual noises when shifting gear, contact your dealer.
5. Oil the gear shifting system (see the "Cleaning / Gear shifting system" chapter).

14.17 Tyre pressure recommendations

The figures in the following table are recommendations for the tyre pressure at different tyre widths. Follow the tyre pressure specifications shown on the tyre. Use a pump with a pressure display to inflate the tyres.

Tyre width	Recommended tyre pressure	
	bar	psi
20 mm/0.78"	9.0 bar	130 psi
23 mm/0.91"	8.0 bar	115 psi
24 mm/0.94"	7.0 bar	100 psi
28 mm/1.1"	6.0 bar	85 psi
30 mm/1.18"	5.5 bar	80 psi
32 mm/1.26"	5.0 bar	70 psi
35 mm/1.38"	4.5 bar	65 psi
37 mm/1.46"	4.5 bar	65 psi
40 mm/1.57"	4.0 bar	55 psi
42 mm/1.65"	4.0 bar	55 psi
44 mm/1.73"	3.5 bar	50 psi
47 mm/1.85"	3.5 bar	50 psi
50 mm/1.97"	3.0 bar	45 psi
54 mm/2.13"	2.5 bar	35 psi
57 mm/2.24"	2.2 bar	32 psi
60 mm/2.36"	2.0 bar	30 psi
75 mm/2.95"	1.5 bar	22 psi
100 mm/3.94"	0.8 bar	12 psi

14.18 Greasing and oiling

Component	Interval	Care product
Chain	After cleaning or riding in the rain, every 250 km/150 mi	Chain oil
Brake and shift cables	When functioning poorly, 1× per year	Silicon-free grease
Wheel bearing, pedal bearing, bottom bracket	1× per year	Bearing grease
Suspension elements	After cleaning or riding in the rain, according to manufacturer specifications	Dedicated spray grease
Contact surfaces of carbon components	On fitting	Fitting lubricant for carbon components
Sliding surfaces of quick releases	1× per year	Grease, spray oil
Metal seat posts in metal frames	On fitting	Grease
Shift system joints	When functioning poorly, 1× per year	Spray oil
Brake joints	When functioning poorly, 1× per year	Spray oil
Joints in full-suspension frames	When functioning poorly, when dirty	According to manufacturer specifications

14.19 Cleaning and maintenance schedule

The cycle must be maintained at regular intervals. The details specified in the table are guidelines for riders who cover between 1,000 and 2,000 km/625 and 1,250 mi or between 50 and 100 hours of operation per year.

Component	Task	Before every ride	Month-ly	Annu-ally	Other interval
Lighting	Test functionality	x			
Tyres	Check tyre pressure	x			
	Check tread depth and sidewalls		x		
Rim brakes	Check lever travel, pad thickness and position relative to the rim; stationary brake test	x			
Brake pads in rim brakes	Clean		x		
Brake cables/pads/ lines	Visual check		x		
Disc brakes	Lever travel, pad thickness, leak-tightness, Stationary brake test	x			
	Change brake fluid (if DOT fluid)			x[1]	
Suspension fork	Check screws and tighten if necessary			x[1]	
	Change oil, grease elastomers			x[1]	

Component	Task	Before every ride	Month-ly	Annu-ally	Other interval
Rigid fork	Check and replace if neces-sary				x[1] min. every 2 years and replace af-ter 7 years or after 20,000 km for bi-cycles / 40,000 km for EPAC
Rims if using rim brakes	Check wall thickness, replace if necessary				x[1] no later than after the 2nd set of brake pads
Suspension seat post	Maintain			x[1]	
Bottom bracket	Check bearing play		x		
	Remove and re-grease			x[1]	
Chain	Check and oil if necessary	x			
	Check for wear, change if necessary, check derailleur shifting system				x[1] from 1,000 km/ 600 mi or 50 hours of opera-tion
Crank	Check or tighten		x		
Paint / anodised alu-minium / carbon	Preserve				x[1] at least twice a year
Wheels	Check trueness and tension		x		
	Centre or re-tension				x[1] as needed

Component	Task	Before every ride	Month-ly	Annu-ally	Other interval
Aluminium handle-bars and handlebar stem	Check and replace if necessary				x[1] min. every 2 years and replace after 5 years or after 20,000 km for bi-cycles / 40,000 km for EPAC
Carbon handlebars	Check and replace if necessary				x[1] check at least every 2 years
Headset	Check bearing play	x			
	Grease			x[1]	
Metallic surfaces	Preserve (exception: Rim sidewall for rim brakes, brake discs)				x[1] at least twice a year
Hubs	Check bearing play		x		
	Grease			x[1]	
Pedals	Check bearing play		x		
Clipless pedals	Clean/grease lock mechanism		x		
Seat post / handle-bar stem	Check screws		x		
	Remove and re-grease Carbon: new fitting lubricant			x[1]	
Front/rear derail-leurs	Clean/oil		x		
Quick releases	Check position	x			

Component	Task	Before every ride	Month-ly	Annu-ally	Other interval
Screws and nuts	Check and tighten if necessary		x		
Valves	Check position	x			
Shift/brake cables	Remove and grease			x[1]	
All vehicle parts	Check whether the vehicle is affected by a recall.			x[1]	

[1] Have this work carried out by your dealer only.

15 Storage

If the cycle will not be used for a prolonged period, the following points must be noted with regard to storage:

- Clean the cycle (see the "Cleaning" chapter).
- Store the cycle in a dry, frost-free place where it is protected against major fluctuations in temperature.
- To prevent tyre deformation, store the cycle hanging by its frame.
- On a cycle with a derailleur shifting system, shift to the small chainring at the front and the smallest sprocket at the back to take as much strain as possible off the cables.

After storage, shift the chainring and cassette back to a gear combination designed for riding before using the cycle again (see the "Derailleur shifting system / Basics / Gear combinations" chapter).

16 Disposal

16.1 Cycle

Do not dispose of your cycle in household waste. Take it to a municipal collection point or a recycling centre.

Alternatively, there are also collections organised by local councils and private organisations. Contact your local council about this or refer to postal information.

16.2 Electronic components and accessories

Replaced or defective LED headlamps, LED rear lamps or hub dynamos, as well as accessories such as bike computers or navigation devices, must also be disposed of separately.

Take parts and devices of this kind to a municipal collection point or a recycling centre.

16.3 Packaging

Any kind of packaging must be disposed of separately. Add cardboard and paperboard to the waste paper and foils in the recyclable waste collection or ask your dealer for disposal.

16.4 Tyres and inner tubes

Tyres and inner tubes must not be disposed of in household waste.

Ask your dealer whether they take care of collection and disposal, or take these items to a recycling centre or municipal collection point.

16.5 Lubricants and care products

Do not dispose of lubricants and care products in household waste, into the sewer system or into the environment. They must be taken to a hazardous waste collection point.

Also follow the notes included on the packaging of such products.

ACCELL GROUP

Supplementary user manual

Pedelec
S-pedelec

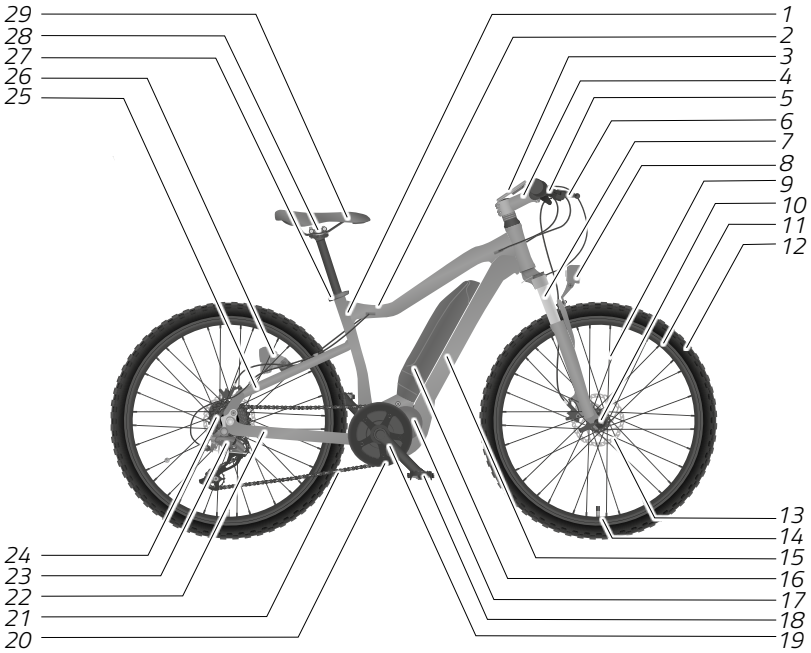

1	Seat tube	16	Rechargeable battery
2	Top tube	17	Motor
3	Control unit	18	Pedal
4	Handlebar stem	19	Crank
5	Handlebars	20	Chainrings
6	Brake lever	21	Chain
7	Front fork / suspension fork	22	Chain stays
8	Headlamp	23	Rear derailleur
9	Spoke	24	Sprocket cassette
10	Wheel hub	25	Seat stays
11	Rim	26	Rear lamp
12	Tyre	27	Seat post clamp
13	Brake	28	Saddle clamp
14	Valve	29	Saddle
15	Down tube		

Example illustration

Contents

1 Basics 6
1.1 Reading and storing the user manual 6
1.2 Identification of warnings 6
1.3 Proper use 7
1.4 Product symbols 8
1.5 Notes on screw turning directions 9
1.6 Pedelec and S-pedelec differences 9
1.6.1 Pedelec 9
1.6.2 S-pedelec 10
1.7 Differences between a pedelec/S-pedelec and bike 10
1.8 EC certificate of conformity for S-pedelecs 11
1.9 CE marking and declaration of conformity for pedelecs 12
1.10 Function 12
1.11 Range 12
1.12 Road use 14
1.13 Minimum tread depth 14
1.14 Minimum pull-out height 15
1.15 Insurance 15
1.16 Exclusion of consumable parts 15
1.17 Liability disclaimer 15
1.18 Transportation of children and cargo 15
1.19 Luggage 16
1.20 Transportation 16
1.20.1 Pedelec/S-pedelec 16
1.20.1.1 By car 16
1.20.1.2 By other means 17
1.20.2 Transporting or shipping the rechargeable battery 17
1.21 Emission sound pressure level 17
2 Safety notes 18
2.1 Usage safety notes 18
2.2 Road safety notes 19
2.3 Charger safety notes 20
2.4 Rechargeable battery safety notes 22
2.5 Misuse 25

2.6 Tuning and manipulation . . . 25
2.7 Residual risks . . . 26
2.8 General safety precautions . . . 26
2.8.1 In case of excessive heat . . . 26
2.8.2 In case of deformation, odour or fluid . . . 27
3 Basic adjustments . . . 28
3.1 Preparations . . . 28
3.1.1 Pedelec/S-pedelec adjustments to suit the rider . . . 28
3.1.2 Notes on the key . . . 28
3.1.3 Charger . . . 28
3.1.4 Rechargeable battery . . . 28
3.2 Before every ride . . . 28
3.3 Before the first ride . . . 29
3.4 First ride . . . 29
3.5 Inspection instructions . . . 30
4 Operation . . . 31
4.1 Pedelec/S-pedelec . . . 31
4.1.1 Switching the drive on/off . . . 31
4.1.2 Switching the lighting on/off . . . 31
4.2 Drive overheating protection . . . 32
4.3 Control unit . . . 32
4.3.1 Pedelec pushing aid . . . 33
4.3.2 S-pedelec starting aid . . . 33
4.4 Rechargeable battery . . . 33
4.4.1 Safety feature . . . 34
4.4.2 Rechargeable battery and charger applications . . . 34
4.4.3 Riding with an empty battery . . . 35
4.4.4 Removing/inserting the rechargeable battery . . . 35
4.4.5 Charging the battery . . . 36
4.4.6 Connecting the rechargeable battery to the charger . . . 37
4.4.7 Stopping the charging process . . . 37
4.4.8 Charging times . . . 37
5 Cleaning and maintenance . . . 38
5.1 Checking the electric drive system . . . 39
5.2 Troubleshooting . . . 39
6 Storage . . . 41

6.1 Storing the rechargeable battery 41
6.2 Storing the pedelec/S-pedelec 42
7 Disposal 43
7.1 Cycle 43
7.2 Electrical elements, single-use batteries and rechargeable batteries . . . 43
7.3 Electronic components and accessories 44
7.4 Packaging 44
7.5 Tyres and inner tubes 44
7.6 Lubricants and care products 44

1 Basics

1.1 Reading and storing the user manual

Contrary to the official standard, EPACs (electric power-assisted cycles) and S-EPACs (speed electric power-assisted cycles) are referred to below as pedelecs (from "pedal electric cycle") and S-pedelecs (from "speed pedal electric cycle") as these terms are in common use.

This user manual is a supplement. It assumes that you have read the "Cycle" user manual. Read all the warnings and notes in this user manual carefully before putting the pedelec or S-pedelec into operation. This user manual is an integral part of the pedelec or S-pedelec. Store this user manual carefully so that it is available at all times. If passing the pedelec or S-pedelec on to a third party, include the user manual along with it.

Also refer to and follow the manuals enclosed with the pedelec/S-pedelec drive system.

1.2 Identification of warnings

The following signal symbols and signal words are used in this user manual to warn against personal injury or damage to property.

Warnings are intended to draw attention to possible dangers. Failure to follow a warning may result in injury to yourself or other people, as well as causing property damage. Read and follow all warnings.

DANGER

This warning identifies a hazard with a high degree of risk, resulting in serious injury or death if not avoided.

WARNING

This warning identifies a hazard with a moderate degree of risk, resulting in serious injury if not avoided.

CAUTION

This warning identifies a hazard with a low degree of risk, resulting in minor or moderate injury if not avoided.

NOTE

This warning calls attention to potential property damage.

1.3 Proper use

This user manual is a supplement, and assumes that you have read the “Cycle” user manual.

Proper use also includes following what is specified in the “Cycle” user manual.

The use of child seats and trailers of any kind with S-pedelecs is prohibited by Accell Group.

Neither the manufacturer nor the dealer accept any liability for damage caused due to improper use.

Please also refer to the “Cycle category” chapter.

1.4 Product symbols

The following symbols are shown on packaging, the rechargeable battery or the charger.

Symbol	Description
	Marking for electrical devices that must not be disposed of in household or non-recyclable waste. Dispose of electrical devices with this marking at suitable collection points for environmentally friendly recycling.
	Marking for single-use and rechargeable batteries that must not be disposed of in household or non-recyclable waste. Dispose of single-use and rechargeable batteries with this marking at suitable collection points for environmentally friendly recycling.
	Marking for materials that are hazardous to the environment. Take particular care when handing products with this marking. Observe disposal regulations!
	Marking for recyclable materials. Sort packaging and dispose of separately. Dispose of cardboard along with waste paper and film in your recycling collection.
	Products marked with this symbol meet all applicable European Economic Community regulations.
	Marking for products that must only be used indoors.
	The 230 V~/50 Hz mains power supply has a class II protection rating. USA: The 120 V~/60 Hz mains power supply has a class II protection rating.
	Symbol for direct current (DC).
	Symbol for alternating current (AC)

1.5 Notes on screw turning directions

NOTE

Material damage due to handling screw joints incorrectly.

Risk of damage!

- Observe the turning direction of screws, thru-axles and nuts.

- Tighten screws, thru-axles and nuts by turning them clockwise.
- Loosen screws, thru-axles and nuts by turning them anticlockwise.

In the event of any deviation from this rule, the change in turning direction will be indicated in the respective chapter. Refer to the relevant notes.

1.6 Pedelec and S-pedelec differences

1.6.1 Pedelec

The following paragraph is only applicable for Europe:

Pedelecs are cycles with an electric auxiliary motor that provides assistance up to a maximum of 25 km/h (15.5 mph) when you pedal.

Depending on the cycle model, there may be a pushing aid which can accelerate the cycle up to 6 km/h (4 mph) depending on what gear the shifting system is in.

The following paragraph is only applicable for the USA:

Pedelecs are cycles with an electric auxiliary motor that provides assistance up to a maximum of 20 mph when you pedal. By law, pedelecs are class 1 (see the "Explanation of symbols" chapter). There may be a pushing aid depending on the cycle model. How this functions is described in more detail in the drive system user manual enclosed with the cycle.

Pedelecs are cycles that are legally classed as bikes in most countries. Acquaint yourself with the national and regional regulations and classification in your country.

- Find out what category your pedelec falls into in your country. Note that regulations vary from country to country.
- Acquaint yourself with the applicable national and regional road regulations.
- Continually acquaint yourself with changes in the content of applicable regulations.
- Note that tampering with the pedelec speed can not only have legal consequences, but may also lead to accidents.

1.6.2 S-pedelec

The following paragraph is only applicable for Europe:

S-pedelecs are cycles with an electric auxiliary motor that provides assistance up to a maximum of 45 km/h (28 mph) when you pedal. Depending on the model, all-electric operation up to a maximum of 18 km/h (11 mph) may also be possible.

The following paragraph is only applicable for the USA:

S-pedelecs are cycles with an electric auxiliary motor that provides assistance up to a maximum of 28 mph when you pedal. There may be a pushing aid depending on the cycle model. How this functions is described in more detail in the drive system user manual enclosed with the cycle. By law, S-pedelecs are class 3 (see the "Explanation of symbols" chapter). In some countries, S-pedelecs are classed as motor vehicles. Acquaint yourself with the national and regional regulations and classification in your country.

Note national and regional differences with regard to:

- Minimum age limits for using S-pedelecs
- Driving licenses
- Compulsory insurance and registration if applicable
- Operating licenses
- Compulsory helmet use
- Provisions regarding use on bike paths, woodland trails and forest roads

➔ Note that tampering with the S-pedelec speed can not only have legal consequences, but may also lead to accidents.

1.7 Differences between a pedelec/S-pedelec and bike

CAUTION

Unexpected pedelec/S-pedelec behaviour due to sharp acceleration.

Risk of accident and injury!

➔ Frost, rain, sand or leaves on the road can lead to accidents, particularly with pedelecs/S-pedelecs that have front-wheel drive.

➔ Use the cycle's gear shifting system and always ride in a low gear.

The components of the electric drive are the main differences between a conventional bike and a pedelec/S-pedelec.

- Due to the significantly higher weight and change in weight distribution, a pedelec/S-pedelec handles differently.
- The drive has a significant impact on braking behaviour.
- Pedelecs/S-pedelecs require more braking force. This can increase wear.
- On pedelecs/S-pedelecs with a central motor, there are significantly higher forces acting on the drive train. This increases wear.
- Electrical assistance may increase riding speed. Careful riding is required as other road users may need to adjust to the higher speed of the pedelec/S-pedelec.
- The handling and braking behaviour requires appropriate expertise, as does use of the rechargeable battery and charger.

➔ Familiarise yourself with the characteristics of the pedelec/S-pedelec even if you already have experience with electrically assisted cycles (see the "Basic adjustments / Before the first ride" chapter).

1.8 EC certificate of conformity for S-pedelecs

The following paragraph is only applicable for Europe:

CoC = certificate of conformity

This document is enclosed with your S-pedelec and uniquely assigned to this one cycle. The CoC confirms that the cycle corresponds to the approved type. You need the CoC to insure the cycle, and to register it if applicable. Acquaint yourself with national and regional regulations before your first ride.

Please note:

Keep the CoC in a safe place. You need it to insure the cycle. The CoC will also be required by the buyer in the event that you sell the cycle. There is great effort and significant cost involved in producing a duplicate CoC at a later date.

Non-EU countries:

In countries outside the European Union, the EC certificate of conformity supplied may not be sufficient. In Switzerland, for example, separate type approval and a cycle registration document are required.

1.9 CE marking and declaration of conformity for pedelecs

The following paragraph is only applicable for Europe:

With the CE marking on the pedelec and the declaration of conformity, the manufacturer of your pedelec confirms that the product meets all requirements* and other relevant provisions in directives 2006/42/EC, 2014/30/EC and standards ISO 4210 and DIN EN 15194, as well as other relevant directives and standards if applicable. You can find the declaration of conformity enclosed with your pedelec.

*Status at the time of publication.

1.10 Function

The drive only assists with riding when you are also pedalling. The amount of assistance is adjusted automatically according to the selected gear, depending on the system or model installed, pedal force, load and speed:

- Depending on the design of your pedelec, the drive may assist up to a speed of 25 km/h (15.5 mph). The pushing aid can accelerate the cycle up to 6 km/h (4 mph) depending on what gear the shifting system is in.
- Depending on the design of your S-pedelec, the drive may assist up to a speed of 45 km/h (28 mph). The starting aid can accelerate the cycle up to 18 km/h (11 mph) depending on what gear the shifting system is in.

In terms of the maximum speed with pedal assistance, a tolerance of 10 % is permitted and possible when riding.

1.11 Range

The drive is an auxiliary motor. To obtain the longest possible range, the following points must be noted:

- The motor works most efficiently at a cadence of 50–80 crank revolutions/minute.
- ➔ Shift to a lower or higher gear before inclines and descents to avoid excessively fast or slow cadences.
- ➔ Operate the gear shifting system as if you were riding without assistance.
- ➔ Use the smaller gears in your gear shifting system on inclines, in headwinds and with heavy loads.
- Starting in the lowest gear increases the range.
- ➔ Always ride in a low gear and pedal as hard as possible.
  - ➔ On models with hub shifting systems, you can shift into 1stgear while stationary. On models with derailleur shifting systems, you should shift into the lowest gear while you are still stopped.

- Riding uphill reduces the range, as does frequent stopping and starting.
- ➔ Shift down to a lower gear in good time before inclines.
- ➔ Look ahead and anticipate while riding so that you can avoid unnecessary stops.
- Riding on unsurfaced ground reduces the range.
- ➔ Where possible, ride on surfaced roads and paths.
- A high gross weight (cycle + rider + luggage) increases energy consumption.
- ➔ Do not transport unnecessary loads.
- You can get the most kilometres out of a new and fully charged battery.
- Neglected cleaning and maintenance can reduce the range.
- ➔ Take care of the pedelec/S-pedelec on a regular basis and check the tyre pressure regularly.
- ➔ Continually test the functionality of the pedelec/S-pedelec and check for wear, as well as referring to all notes on the rechargeable battery in this user manual and in the drive system manual.
- ➔ Observe maintenance intervals.
- High average speeds reduce the range.
- The stronger the assistance mode, the shorter the range.
- Ambient temperatures below +10 °C/50 °F and above +40 °C/104 °F can reduce the range.
- Particularly high and particularly low ambient temperatures can permanently speed up battery wear or even damage the rechargeable battery.
- ➔ Store the rechargeable battery at room temperature before a ride to ensure an optimum temperature for use.
- ➔ Refer to the notes on storing the rechargeable battery correctly.
- ➔ Do not insert the rechargeable battery in the holder until just before the ride.

Because the range is dependent on a variety of factors such as the level of assistance, speed, shifting behaviour, tyres and tyre pressure, age and condition of the rechargeable battery, route profile and conditions, headwind and ambient temperature as well as the weight of the cycle, rider and luggage, it is not possible to accurately predict the range before setting off or during a ride.

In general, however:

- If the level of assistance remains the same, then the less force you need to apply to reach a particular speed (e.g. through optimum shifting behaviour), the less energy the drive will consume and the longer the range from the battery charge.
- If all other conditions are the same, then the higher the selected level of assistance, the shorter the range.

1.12 Road use

The following paragraph is only applicable for Europe:

Depending on the design, pedelec assistance may be effective up to a speed of 25 km/h (15.5 mph). With an S-pedelec, the assistance is switched off at a speed of 45 km/h (28 mph).

The following paragraph is only applicable for the USA:

Depending on the design, pedelec assistance may be effective up to a speed of 20 mph. With an S-pedelec, the assistance is switched off at a speed of 28 mph.

- Find out before your first ride whether your pedelec/S-pedelec is equipped in accordance with requirements for use on the road. Note that national and regional regulations may vary. For example:
  - Brakes
  - Lighting and reflectors
  - Bell or other approved warning device
  - Child trailers and child seats
- Acquaint yourself with the applicable national and regional road regulations. For example:
  - Minimum rider age
  - Compulsory insurance
  - Operating licenses
  - Compulsory helmet use
  - Compulsory use of reflective safety vests
  - Refer to and follow the traffic code.
- Bear in mind that tampering with the pedelec/S-pedelec speed, or tuning the pedelec-/S-pedelec, can have legal consequences.

Laws and regulations can change at any time. Regularly acquaint yourself with national and regional regulations.

1.13 Minimum tread depth

The following paragraph is only applicable for Europe:

Please note that a minimum tread depth of 1 mm is prescribed for cycles such as S-pedelecs.

1.14 Minimum pull-out height

Depending on the S-pedelec model, the seat post may be labelled with a minimum pull-out depth marking.

- Pull the seat post out far enough that the lighting components are not obscured by any license plate which may be fitted to the saddle.

1.15 Insurance

- Check whether damage is adequately covered by the terms of your insurance.
  - If in doubt, contact your insurance company.

1.16 Exclusion of consumable parts

In addition to the consumables listed in the "Cycle" user manual, the rechargeable battery is also a consumable part. This does not include manufacturing defects.

Information on normal operational wear and tear can be found in the respective system operating manual. The respective system instruction manual is enclosed with your pedelec/S-pedelec.

Further information can be found on the respective brand homepage (see list in chapter "Information online" in the directory).

1.17 Liability disclaimer

The manufacturer is not liable for damage or failures caused due to any direct or indirect use of the pedelec/S-pedelec which falls outside what is deemed proper use.

1.18 Transportation of children and cargo

Accell Group does not permit the use of S-pedelecs to transport children or cargo in a trailer.

Accell Group does not allow the option of using S-pedelecs to transport a child in a child seat.

Accell Group accepts no liability for any damage resulting from the use of trailers and/or child seats with S-pedelecs.

As to using a trailer of any design and/or a child seat with a pedelec, see the "Safety / Notes on carrying children" chapter in the general cycle manual.

1.19 Luggage

Position your luggage on the S-pedelec so as not to obscure any license plate which may be fitted to the saddle.

1.20 Transportation

1.20.1 Pedelec/S-pedelec

CAUTION

Damage to the rechargeable battery due to impacts.

Risk of short circuit and fire!

- Remove the rechargeable battery before transporting the pedelec/S-pedelec.
- Transport the rechargeable battery with particular care.

The rechargeable battery must be removed from the pedelec/S-pedelec before transporting. (see the "Operation / Rechargeable battery / Removing/inserting the rechargeable battery" chapter). Afterwards, cover the contacts of the rechargeable battery to protect it against a short circuit. If the control unit is detachable, it should be removed before transportation to prevent damage and loss.

- Acquaint yourself with national and regional regulations about transporting and shipping rechargeable batteries.
- Refer to and follow the enclosed system manuals.

1.20.1.1 By car

- Stow the rechargeable battery so that it cannot slip or collide with other items during the journey.
- Protect the rechargeable battery against compressive stress by securing it correctly, and avoid impacts.
- Stow the rechargeable battery so that it will not be warmed up by sunlight or other heat sources.
- When lifting the pedelec/S-pedelec, note that these are heavier than other cycles and have a different weight distribution.

The braking and lateral forces acting on the bike carrier are higher with pedelecs/S-pedelecs than with conventional bikes.

- Check whether your bike carrier is suitable for pedelecs/S-pedelecs.
- Ask a dealer about suitable bike carriers for your pedelec/S-pedelec.

1.20.1.2 By other means

The transportation of pedelecs/S-pedelecs with a rechargeable battery is subject to particular regulations which are constantly being extended or updated. These regulations may vary depending on the mode of transport used.

- Ask the rail company, airline or ferry operator about applicable regulations for transporting pedelecs/S-pedelecs in good time before your departure. When doing so, have the technical specifications for your pedelec/S-pedelec to hand.

1.20.2 Transporting or shipping the rechargeable battery

Separately transported lithium-ion batteries are hazardous goods. Undamaged rechargeable batteries may be transported by private users on the road without further requirements.

- Acquaint yourself with national and regional road regulations about transporting hazardous goods.

The rechargeable battery must not be carried on a plane as hand luggage.

- Observe specific requirements with regard to packaging and labelling for transportation, e.g. when transporting by air or contracting a carrier.
- Find out about transporting rechargeable batteries and suitable transport packaging by asking a carrier or dealer directly, for example.
- Ensure that rechargeable batteries transported in hand luggage or in a rucksack, e.g. as spare batteries, are protected against liquids and short circuits.
- Do not continue to use rechargeable batteries after a fall. Have rechargeable batteries checked before their next use.

1.21 Emission sound pressure level

The A-weighted emission sound pressure level at the driver's ears is less than 70 db(A).

2 Safety notes

This chapter covers notes on the rechargeable battery. Even if all safety precautions are observed, the rechargeable battery can still become dangerous, such as if it catches fire.

- In an emergency, make sure that your actions do not put you or other people in danger at any time.
- The instructions in this chapter must be followed in the event of an emergency.
- Read these instructions so that you can be focussed and prepared when reacting to an emergency.
- Refer to and follow the enclosed system manuals.

2.1 Usage safety notes

WARNING

Danger to children and people with reduced physical, sensory or mental capabilities or with a lack of experience and expertise, e.g. children or people with physical or mental limitations.

Risk of accident and injury!

- Only allow the pedelec/S-pedelec, rechargeable battery and charger to be used by people who have been instructed in how to use them safely and properly, and who understand the risks resulting from their use.
- Do not allow children to play with the pedelec/S-pedelec.
- Supervise children using the pedelec.
- Instruct children in how to handle the pedelec.

WARNING

Malfunctions and danger due to repairs without expertise.

Risk of accident and injury!

- Have repairs carried out by a dealer.

NOTE

Limited use of the pedelec/S-pedelec due to high and low temperatures.

Risk of damage!

- Observe temperature limits.
- Avoid transporting the rechargeable battery by car in high outdoor temperatures. Ensure that you park the car in the shade when transporting the rechargeable battery by car.
- Do not park the pedelec/S-pedelec near heat sources.
- Avoid direct sunlight on the rechargeable battery when parking the pedelec/S-pedelec.

2.2 Road safety notes

WARNING

Incorrect or improper use of the pedelec/S-pedelec.

Risk of accident and injury!

- Only use the cycle on public roads if its equipment meets national and regional road regulations.
- Refer to and follow national and regional road regulations.

WARNING

Lack of protective headgear.

Risk of injury!

- Wear a suitable fitted helmet when riding.

2.3 Charger safety notes

DANGER

Electric shock due to handling the electric current and live components incorrectly.

Risk of death!

- Check the charger, mains cable and mains plug for damage before each use.
- If you find or suspect any damage, do not use the charger.
- Only use the charger indoors and do not leave it unattended during use.
- Connect the charger solely to a properly installed plug socket that meets the technical specifications of your charger.
- Make sure that the charger never comes into contact with water or other liquids.

WARNING

Incorrect use of the charger.

Risk of short circuit followed by fire!

- Check the charger, mains cable and mains plug for damage before each use.
- If you find or suspect any damage, do not use the charger.
- Place the charger so that it cannot become damp or wet.
- Never clean or spray the charger with liquid.
- Do not leave the charger unattended during use.
- If constant monitoring is not possible, then the charger may only be used in rooms where a smoke detector is installed.
- The charger must not be used if any damage is found or suspected.
- Do not open, dismantle, pierce or deform the charger.
- Repairs to the charger must only be carried out by a dealer, and only using original spare parts.

NOTE

Damage to the charger due to it being used incorrectly.

Risk of damage!

- Always place the charger on fireproof material (e.g. stone, glass, ceramic) when charging.
- Use the charger solely to charge the original rechargeable battery.
- Always pull the mains plug out of the socket after using the charger.
- Pull on the plug and not the cable when disconnecting the charger from the mains after charging.
- Read the additional safety notes on the charger housing.

2.4 Rechargeable battery safety notes

DANGER

Poisoning or fatal injury from leaking fumes and/or hydrofluoric acid in the event of the rechargeable battery catching fire.

Risk of death!

- Remove yourself and other people from the vicinity of the burning battery.

WARNING

Damage to the rechargeable battery can cause fires and explosions.

Risk of fire and explosion!

- Do not attempt to put out the rechargeable battery yourself.
- Keep back from the rechargeable battery and let it burn out in a controlled way.

WARNING

Internal damage to the rechargeable battery can cause overheating or result in liquid and gas leaking from the battery.

Risk of fire and explosion!

- Have the rechargeable battery checked by a dealer after falls or hard impacts.
- Do not open, dismantle, pierce or deform the rechargeable battery and battery housing.

CAUTION

Injury to skin or eyes from leaking lithium in the event that the rechargeable battery is damaged.

Risk of injury!

- Only touch damaged rechargeable batteries with protective gloves.
- Wear safety goggles and an apron when in contact with a damaged rechargeable battery.

NOTE

Damage to the drive and rechargeable battery due to charging incorrectly.

Risk of damage!

- Do not charge the battery if you suspect it is damaged.
- It is essential that you read the "Operation / Rechargeable battery / Charging the battery" chapter before charging the battery for the first time.
- Only charge the battery with the original charger, and do not leave it unattended while charging.
- Always place the rechargeable battery on fireproof material (e.g. stone, glass, ceramic) when charging.
- If in doubt, have your dealer explain how to use rechargeable batteries.

NOTE

Damage to the rechargeable battery, drive or nearby items due to using the battery incorrectly.

Risk of damage!

- Use the rechargeable battery supplied solely for the original drive.
- Keep the rechargeable battery away from fire and other heat sources, and protect it against strong sunlight.
- Protect the rechargeable battery against moisture. Never clean or spray the rechargeable battery with liquid.
- Do not use the rechargeable battery if you notice unusual heat or discolouration, or if the battery is obviously damaged.

2.5 Misuse

Ensure you do not misuse the Pedelec/S-pedelec in any of the following ways:

- Using the pedelec/S-pedelec for competitions, jumps, stunts or tricks if the cycle's category excludes these activities
- Improper repairs and maintenance;
- Improper use of the rechargeable battery;
- Structural changes to the pedelec/S-pedelec's condition as delivered, especially to the tuning, and any other modifications to the pedelec/S-pedelec;
- Opening and changing any component of the pedelec/S-pedelec;
- Charging outside the temperature range of +0 °C/32 °F to +45 °C/113 °F;
- Deep discharge of the rechargeable battery due not charging it for over 3 months or improper storage of the rechargeable battery outside the optimum temperature range of +10 °C/50 °F to +15 °C/59 °F.
- Ambient temperatures below +10 °C/50 °F and above +40 °C/104 °F can reduce the range.
- Particularly high and particularly low ambient temperatures can permanently speed up battery wear or even damage the rechargeable battery.

Misuse of the pedelec can lead to exclusion of the warranty.

2.6 Tuning and manipulation

Tuning and manipulation of the pedelec/S pedelec includes

- the conversion of the speed sensor,
- the installation of a tuning chip,
- the replacement of sprockets with parts that do not meet the specification (number of teeth) of the original parts, and other changes to the hardware components,
- changes to the control software.

Tuning and manipulation of the pedelec/S pedelec can have legal consequences for the user. Possible consequences are:

- an administrative offence and a fine
- a criminal offence for driving without a driving licence, in case of recurrence possibly an entry in the criminal record
- the withdrawal of the driving licence
- the loss of insurance cover under a personal liability insurance policy

- the loss of liability for material defects, the guarantee and warranty claims
- a partial debt in the event of an accident

For more information, you can request the component replacement guide from your dealer.

2.7 Residual risks

Even if all safety notes and warnings are observed, using the pedelec/S-pedelec still entails unforeseeable risks such as:

- Drivers and pedestrians failing to realise at first glance that a pedelec/S-pedelec may be travelling at a higher speed.
- Damage to the rechargeable battery caused by either low or high temperatures or by direct sunlight.
- Battery malfunction.

2.8 General safety precautions

If the rechargeable battery is found to be faulty or damaged:

- ➔ Do not use the rechargeable battery.
- ➔ Wear protective gloves when touching the rechargeable battery.
- ➔ Wear safety goggles for your own protection.
- ➔ Do not breathe in any leaking gases or steam.
- ➔ Avoid skin contact with leaking fluid.

2.8.1 In case of excessive heat

If the rechargeable battery is found to generate excessive heat:

- ➔ Remove the rechargeable battery if you can do so safely.
- ➔ Choose a temporary storage location outdoors and store the rechargeable battery in a fireproof container or place it on fireproof ground.
- ➔ If storing the rechargeable battery outdoors, clearly secure a wide area around the storage location.
- ➔ Have the rechargeable battery checked by a dealer straight away.

2.8.2 In case of deformation, odour or fluid

If the rechargeable battery is found to be deformed, producing an odour or leaking fluid:

- Remove the rechargeable battery if you can do so safely.
- If you can move the rechargeable battery safely, place it in a fireproof and acid-resistant container, such as one made of stone or clay.
- Choose a fireproof temporary storage location outdoors. If storing the rechargeable battery outdoors, clearly secure a wide area around the storage location.
- Have the rechargeable battery disposed of by a dealer immediately.

3 Basic adjustments

This chapter contains information about basic adjustments to the pedelec/S-pedelec, and information about how to put the cycle into use.

3.1 Preparations

This chapter contains information about how to prepare the pedelec/S-pedelec for use.

3.1.1 Pedelec/S-pedelec adjustments to suit the rider

Individual adjustments are described in the "Basic adjustments" chapter of the "Cycle" user manual.

3.1.2 Notes on the key

- The key number(s) stamped on the key should be recorded on your cycle passport.
- If you lose the key, contact a dealer for a replacement.

3.1.3 Charger

- Refer to the information enclosed by the manufacturer about the charger.
- Read the specifications on the charger nameplate.
  - If these specifications do not match the voltage supply, do not use the charger.
- Before connecting the charger to the voltage supply, read the "Operation / Rechargeable battery / Charging the battery" chapter.

3.1.4 Rechargeable battery

- Charge the battery fully (see the "Operation / Rechargeable battery / Charging the battery" chapter).

3.2 Before every ride

The pedelec/S-pedelec must be checked according to the "Basic adjustments / Inspection instructions" chapter.

3.3 Before the first ride

Warning

Incorrect operation of the vehicle due to insufficient knowledge.

Risk of accident and injury!

- If you are unfamiliar with the arrangement of the brake levers for the front or rear wheel brake, have them changed by your dealer.

CAUTION

Unexpected pedelec/S-pedelec behaviour due to incorrect operation.

Risk of accident and injury!

- Familiarise yourself with the "Operation" chapter before switching the cycle on for the first time.

The rechargeable battery is fully charged before your first ride (see the "Operation / Rechargeable battery / Charging the battery" chapter).

3.4 First ride

The components of the electric drive are the main differences between a conventional bike and a pedelec/S-pedelec. Information on the differences between bikes, pedelecs and S-pedelecs can be found in the "Basics / Pedelec and S-pedelec differences" and "Basics / Differences between a pedelec/S-pedelec and bike" chapters.

- Read these chapters carefully before your first ride.

- Practice operation and use off the road in an open space on even, solid ground with good grip.
- Refer to the control unit information enclosed by the manufacturer.

1. Practice using the pushing aid.
2. Practice using the pedelec/S-pedelec and its features without motor assistance at first. Then gradually increase the strength of the assistance.
3. Choose the lowest level of assistance on the control unit.

4. Start slowly.
5. Operate the brakes carefully and get accustomed to the brake action (see the "Brake" chapter in the cycle user manual).
   - ➔ When you can operate the brakes safely, get accustomed to the assistance from the drive.
   - ➔ When you can ride safely, repeat the familiarisation process and brake test for the other gears.

3.5 Inspection instructions

Note the following points before every ride:

- ➔ Regularly check your pedelec/S-pedelec according to the inspection instructions in the "Cycle" user manual (see the "Before setting off / Before every ride" chapter in the cycle user manual).
- ➔ Check whether the lock for the rechargeable battery is fastened.
- ➔ Check the rechargeable battery for damage (visual inspection).
- ➔ Check the drive for damage (visual inspection).
- ➔ Check whether cables and connectors are securely in place and look for damage (visual inspection).
  - ➔ If you discover any missing or damaged parts, do not use the pedelec/S-pedelec.
  - ➔ Have the pedelec/S-pedelec repaired by a dealer.
- ➔ Prepare the rechargeable battery and the charger for putting your pedelec/S-pedelec into operation.
- ➔ If you own an S-pedelec, check whether your insurance plate is still valid.

4 Operation

Different drive units may be installed depending on the cycle model.

- Acquaint yourself with how to operate the drive before your first ride.
  - Refer to and follow the enclosed system manuals.
- Have your dealer instruct you on operating the drive.

4.1 Pedelec/S-pedelec

CAUTION

Unexpected pedelec/S-pedelec behaviour due to incorrect operation.

Risk of accident and injury!

- Familiarise yourself with the “Operation” chapter before switching the cycle on for the first time.

4.1.1 Switching the drive on/off

- To switch the drive on and off, press the On/Off button on the control unit.
  - Note that there must be no load on the pedals when switching the drive on.

4.1.2 Switching the lighting on/off

Warning

Poor visibility on the road.

Risk of accident and injury!

- Before setting off, make sure that your pedelec/S-pedelec has enough battery charge to power the lighting during the ride.

- Use the control unit to switch the lighting on or off.

4.2 Drive overheating protection

CAUTION

Overheating of the drive and rechargeable battery in the event of a malfunction.

Risk of burning!

➔ Avoid contact with the drive and rechargeable battery.

The drive is automatically protected against damage due to overheating. When the drive temperature is too high, the drive switches off automatically.

- ➔ To prevent the drive overheating, use a low level of assistance from the drive in high outdoor temperatures or on steep inclines.
- ➔ If the drive switches off while riding with a charged battery, temporarily use the pedelec/S-pedelec like a conventional bike so that the drive can cool down. Switch off the assistance.
  - ➔ If the fault is not corrected by letting the drive cool down, have the pedelec/S-pedelec checked by a dealer.

4.3 Control unit

CAUTION

Delayed rider reaction due to distraction.

Risk of accident and injury!

➔ Familiarise yourself with the control unit features.

- ➔ Familiarise yourself with the control unit features so that you can focus completely on the road.

4.3.1 Pedelec pushing aid

CAUTION

Pinching and crushing of body parts by moving components.

Risk of injury!

- Only use the “pushing aid” feature when pushing the pedelec.
- Only use the pushing aid when the pedelec is standing on both wheels.

Depending on the model, the pedelec may be equipped with a pushing aid. The pushing aid makes it easier to push the pedelec. The speed of this feature depends on what gear is engaged. The maximum is 6 km/h (4 mph). The lower the selected gear, the lower the speed of the pushing aid.

4.3.2 S-pedelec starting aid

The following section is only applicable for Europe:

The S-pedelec is equipped with a starting aid up to a maximum of 18 km/h (11 mph). This starting aid is all-electric and does not require pedal assistance.

4.4 Rechargeable battery

NOTE

Irreparable damage to the pedelec/S-pedelec due to self-discharge for technical reasons.

Risk of damage!

- Recharge an empty battery straight away.

Pedelecs/S-pedelecs are usually equipped with a lithium-ion (li-ion) rechargeable battery. With proper use, li-ion batteries are safe. Lithium-ion batteries have high energy density. For this reason, a great deal of caution must be taken when handling these rechargeable batteries. For rider safety, reliable operation and a long service life, it is essential to note the following:

– After the first full charge, the battery can be partially charged. Partially charging the battery will not damage it, as lithium-ion rechargeable batteries do not have a mem-

ory effect.

– Partial charges are rated proportionally to their capacity (a charge of 50 % corresponds to half a charge/discharge cycle).

Temperature limits must be observed for the rechargeable battery to function properly.

➔ Refer to the information enclosed by the manufacturer about the rechargeable battery as well as the enclosed drive system manuals.

– Note that ambient temperatures below +10 °C/50 °F and above +40 °C/104 °F can reduce the range.

– Particularly high and particularly low ambient temperatures can permanently speed up battery wear or even damage the rechargeable battery.

➔ The battery is subject to a certain amount of wear. For details about the charging cycles and the corresponding power losses, refer to the information in the system operation manual of the associated drive system.

  ➔ If you experience excessive power loss, e.g. operating time is significantly shortened, have the rechargeable battery checked by a dealer.

➔ Never make any alterations to the rechargeable battery yourself.

4.4.1 Safety feature

CAUTION

Overheating of the drive and rechargeable battery in the event of a malfunction.

Risk of burning!

➔ Avoid contact with the drive and rechargeable battery.

The rechargeable battery and/or the charger are equipped with a temperature control which only allows charging when the temperature is between 0 °C/32 °F and +45 °C/113 °F. If the rechargeable battery is outside these temperature limits, the charging process is stopped automatically.

➔ Refer to and follow the notes in the system manual if charging stops prematurely.

4.4.2 Rechargeable battery and charger applications

The drive, rechargeable battery and charger are designed for each other and approved solely for use with the pedelec/S-pedelec.

4.4.3 Riding with an empty battery

Please note that the lighting is powered by the cycle's rechargeable battery. If the battery charge is depleted enough that the pedal assistance system shuts off, the lighting will only have limited power and will subsequently shut off as well.

If the battery charge is completely used up during a ride, the pedelec/S-pedelec can be used like a conventional bike.

- Note that using a pedelec/S-pedelec without assistance is more difficult than using a conventional bike.

4.4.4 Removing/inserting the rechargeable battery

NOTE

Damage to the electronics due to removing the rechargeable battery incorrectly.

Risk of damage!

- Switch off the drive before removing the rechargeable battery.

NOTE

Damage to the rechargeable battery due to dropping.

Risk of damage!

- Before use, check that the rechargeable battery is correctly inserted in the holder and that the lock is engaged.

The rechargeable battery may be removed/inserted differently depending on the drive system.

- Refer to the enclosed system manuals.

4.4.5 Charging the battery

WARNING

Heat, leaking gas and damage to the rechargeable battery due to incorrect charging.

Risk of injury and fire!

- Do not use or touch the rechargeable battery and charger if you notice unusual heat, odour or discolouration, or if the battery is obviously damaged.
- Pull the charger plug out of the socket.
- Pull on the plug and not the cable when disconnecting the charger from the mains after charging.

With some models, the battery can be charged while it is inserted in the pedelec/S-pedelec. With other models, the battery must be removed before charging.

- Only charge the battery in a dry, well-ventilated room.
- If you can shelter your pedelec/S-pedelec in a dry and safe place, e.g. in a garage or bike shed, charge the battery while it is inserted.
- If you cannot shelter your pedelec/S-pedelec, remove the battery to charge it (see the "Operation / Rechargeable battery / Removing/inserting the rechargeable battery" chapter).
- Remove any dirt from the charging port and contacts with a dry cloth.
- Do not leave the rechargeable battery unattended while charging.
- Charging a battery while inserted: Switch off the pedelec/S-pedelec to charge the battery.
- Charging a battery while removed: Always place the charger on fireproof material (e.g. stone, glass, ceramic) when charging.

4.4.6 Connecting the rechargeable battery to the charger

1. Insert the charging plug on the charger into the charging port on the rechargeable battery or the battery holder.
2. Ensure that you line up the charging plug so that the contacts on the charging plug match those on the charging port.
3. Monitor the charging process.

4.4.7 Stopping the charging process

Charging can be stopped before the battery is fully charged, e.g. for storage (see the "Storage / Storing the rechargeable battery" chapter).

4.4.8 Charging times

When the rechargeable battery is empty, a full charging process generally takes between 3 and 6 hours. The duration of the battery charging process is dependent on the following factors:

- Battery charge level
- Battery temperature and ambient temperature
- Battery capacity
- Battery model
- Charger

5 Cleaning and maintenance

WARNING

Injury from electric current during cleaning, maintenance and repair work.

Risk of electric shock and short circuit!

- Pull the charger plug out of the socket.
- Pull on the plug and not the cable when disconnecting the charger from the mains.
- Remove the rechargeable battery from the pedelec/S-pedelec before cleaning and maintenance.
- Do not clean the components with running water or other liquids.
- Do not use high-pressure equipment for cleaning.

WARNING

Touching hot components.

Risk of burning!

- Let the drive and rechargeable battery cool down before touching the components.

- Refer to the "Cycle" user manual for information about cleaning and maintenance.
- Check safety-related components before every ride (see the "Basic adjustments / Before every ride" chapter).
- Check your pedelec/S-pedelec after a fall.
- Have maintenance work carried out by a dealer.

5.1 Checking the electric drive system

- Refer to the enclosed system manuals.
- Check all electrical cables for damage.
- Examine the display for cracks and damage, and check that it is firmly in place.
- Check the control unit for cracks and damage, and check that it is firmly in place.
- Check the rechargeable battery for damage.
- Check that all plug contacts are properly in place and reconnect them if necessary.
- Check the cable harness for damage. Check that the outer casing is undamaged.
- Carry out a visual inspection of the auxiliary motor.

5.2 Troubleshooting

WARNING

Working on the pedelec/S-pedelec with the rechargeable battery inserted or the charger connected.

Risk of electric shock!

- Remove the rechargeable battery from the holder.
- Disconnect the charger from the voltage supply.

CAUTION

Fingers caught in moving parts.

Risk of injury!

- Remove the rechargeable battery from the holder before carrying out maintenance work.

CAUTION

The drive and rechargeable battery may become hot in the event of a malfunction.

Risk of burning!

- Let the drive and rechargeable battery cool down before touching them.

The components of the pedelec/S-pedelec are automatically checked on an ongoing basis. If a fault is found, an appropriate error message will appear on the display.

- Refer to the enclosed system manuals.
- If the actions listed do not solve the problem, contact a dealer.

Depending on the fault type, the drive may be switched off automatically. You can continue to ride without assistance from the drive.

- Contact a dealer to have the drive checked before your next ride.

6 Storage

6.1 Storing the rechargeable battery

WARNING

Respiratory tract, eye or skin irritation from leaking fumes or fluid in the event of damage to or improper use of the rechargeable battery.

Risk of injury!

- If you experience symptoms, seek medical advice straight away.
- Make sure there is an ample supply of fresh air if the rechargeable battery is defective.
- Remove contaminated clothing immediately.
- Avoid contact with the battery fluid.
- If battery fluid gets into your eyes, rinse them out with plenty of water. Seek advice from a doctor immediately.
- Wash your skin thoroughly with soap and water.

If the rechargeable battery will not be used for a prolonged period, the following points must be noted with regard to storage:

- Charge the battery to around 60 % of its capacity.
- If necessary, remove the rechargeable battery from the holder to store it.
- Store the rechargeable battery out of reach of children and animals, and in such a way that it cannot fall down.
- Store the rechargeable battery ideally at around +10 °C/50 °F to +15 °C/59 °F, in a dry and well-ventilated place such as an appropriate basement room.
- Protect the rechargeable battery against moisture.
- Ensure that the temperature remains between the upper and lower limits during storage.

- If storing for more than 3 months, recharge the battery every three to six months, depending on storage conditions. Charge the battery to around 60 % of its capacity again at these times.
  - Always disconnect the rechargeable battery from the charger and the charger from the voltage supply after charging.
- When storing the rechargeable battery, ensure that the poles do not short-circuit. Cover the poles with masking tape if necessary.

6.2 Storing the pedelec/S-pedelec

If the pedelec/S-pedelec will not be used for a prolonged period, the following points must be noted with regard to storage:

- Clean the pedelec/S-pedelec (see the “Cleaning and maintenance” chapter).
- Protect the pedelec/S-pedelec against moisture, dust and dirt during storage.
- Store the pedelec/S-pedelec in a dry, frost-free place where it is protected against major fluctuations in temperature.
- To prevent tyre deformation, store the pedelec/S-pedelec hanging by its frame.

7 Disposal

7.1 Cycle

Do not dispose of your cycle in household waste. Take it to a municipal collection point or a recycling centre.

Alternatively, there are also collections organised by local councils and private organisations. Contact your local council about this or refer to postal information.

7.2 Electrical elements, single-use batteries and rechargeable batteries

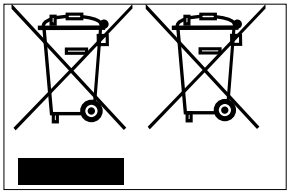

Pedelecs, S-pedelecs and bikes with electric shifting systems or electric damper systems must have all single-use and rechargeable batteries removed first, along with any detachable controls containing batteries. This means the rechargeable batteries from the drive system, displays with built-in rechargeable batteries, rechargeable batteries for shifting or damper systems that are built into or onto the frame, etc. Removable displays with built-in rechargeable batteries or displays that continue to offer an active display after removal from their brackets and do not appear to have a battery compartment on the back side must be disposed of completely. Only externally accessible battery compartments (generally for button cell batteries) may be opened. The display housing must not be opened to remove a fixed rechargeable battery.

Fixed rechargeable batteries in displays are generally lithium-ion batteries and therefore hazardous waste. They must not be disposed of in household waste, and must be taken to a municipal collection point or a recycling centre instead.

This also applies to replaced batteries which can no longer be used due to wear or a defect. Please also refer to the “Safety notes / Rechargeable battery safety notes” chapter in the supplementary user manual Pedelec, S-Pedelec.

Commercially available single-use batteries can be taken to a municipal collection point or a recycling centre, and can also placed in battery collection boxes which are available in various shops or stores.

After removing any single-use or rechargeable batteries, the remainder of the cycle is classed as waste electrical and electronic equipment and must be sent for recycling separately.

Your dealer, the municipal collection point or a recycling centre can assist you here.

7.3 Electronic components and accessories

Replaced or defective LED headlamps, LED rear lamps or hub dynamos, as well as accessories such as bike computers or navigation devices, must also be disposed of separately.

Take parts and devices of this kind to a municipal collection point or a recycling centre.

7.4 Packaging

Any kind of packaging must be disposed of separately. Add cardboard and paperboard to the waste paper and foils in the recyclable waste collection or ask your dealer for disposal.

7.5 Tyres and inner tubes

Tyres and inner tubes must not be disposed of in household waste.

Ask your dealer whether they take care of collection and disposal, or take these items to a recycling centre or municipal collection point.

7.6 Lubricants and care products

Do not dispose of lubricants and care products in household waste, into the sewer system or into the environment. They must be taken to a hazardous waste collection point.

Also follow the notes included on the lubricant and care product packaging.

ACCELL GROUP

Supplementary user manual

Children's bike

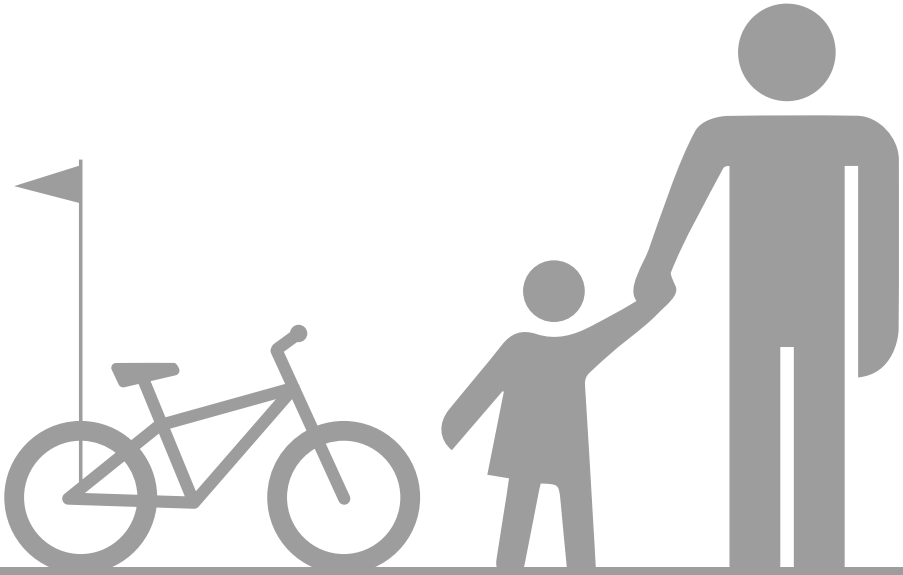

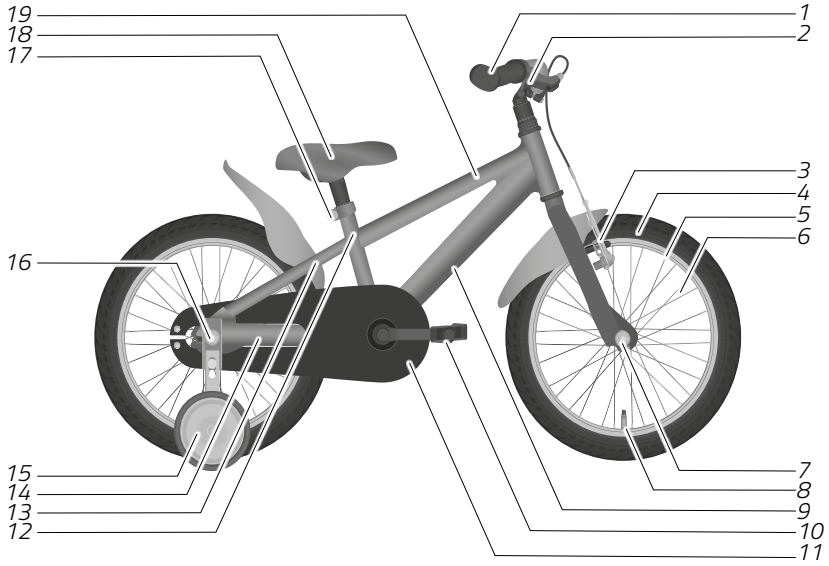

1	Handlebar grips and handlebars	11	Chain case
2	Brake lever	12	Seat tube
3	Front brake	13	Chain stays
4	Tyre	14	Seat stays
5	Rim	15	Stabiliser (training wheel)
6	Spoke	16	Rear wheel hub
7	Front wheel hub	17	Seat post clamp
8	Valve	18	Saddle
9	Down tube	19	Top tube
10	Pedal		

Example illustration

Contents

1 General notes 4

2 Safety notes 6

3 Residual risks 9

4 Proper use 9

5 Basics 10

5.1 Notes on road use 10

5.2 Notes on the brakes 11

5.3 Before every ride 12

5.4 Inspection instructions. 12

5.5 Before the first ride. 13

6 Stabilisers 14

6.1 Fitting stabilisers 14

6.2 Removing stabilisers 15

1 General notes

This user manual is a supplement and aimed at the child's parent or guardian. It assumes that you have read the "Cycle" user manual. Read the entire "Cycle" user manual carefully, paying particular attention to the safety notes and notes on adjustment and operation, before your child uses the children's bike.

WARNING

Lack of road knowledge.

Risk of accident!

- Explain to your child the regulations on road behaviour.
- Explain to your child how to be defensive and careful on the road.
- Only allow your child to use the children's bike on the road once they have understood the regulations on road behaviour.
- Only allow your child to ride on the road when accompanied by a parent or guardian.

WARNING

Lack of knowledge about how to operate the children's bike.

Risk of accident!

- Explain to your child how to operate the children's bike.
- Only allow your child to use the children's bike on the road once they can operate it safely.

WARNING

Component breakage due to overloading.

Risk of accident and injury!

- Explain to your child that the children's bike may only be used by one person, and that other people must not be transported on the luggage carrier, crossbar or handlebars.
- Ensure that the maximum gross weight limit for the children's bike is not exceeded.

WARNING

Insufficient knowledge or ability.

Risk of accident and injury!

- Do not allow the children's bike to be used by children with reduced physical, sensory or mental capabilities or with a lack of experience and expertise.
- Do not allow children to carry out care and maintenance.
- Do not allow young children to play with the packaging materials, particularly the packaging film. Children may become entangled in it and suffocate or cut themselves.

- Read the entire user manual and explain all the contents to your child.
- Practice with your child how to ride on the road, and only allow them to ride alone once you feel it is responsible to do so.
- Regularly check your child's seating position and have adjustments made by a dealer if necessary.
  - Refer to the notes on minimum insertion depths for the saddle and handlebars (see the "Basic adjustments / Saddle / Minimum insertion depth" and "Basic adjustments / Handlebars and handlebar stems / Minimum insertion depth" chapters in the cycle user manual).

2 Safety notes

WARNING

Longer braking distance and reduced traction due to slippery or dirty roads.

Risk of accident and injury!

- Ensure that your child adapts their speed to suit the weather and road conditions.

WARNING

High risk of accident following incorrect or improper use of the children's bike.

Risk of accident!

- Only allow your child to use the children's bike on the road if its equipment meets national road regulations.
- Only allow your child to use the children's bike in compliance with national and regional road regulations.
- Explain to your child the national and regional regulations on using footpaths, bike paths and roads.

WARNING

Poor visibility due to incorrect clothing.

Risk of accident and injury!

- Only allow your child to ride on the road while wearing bright and conspicuous clothing, e.g. with reflective elements.

WARNING

Lack of protective headgear.

Risk of injury!

- Only allow your child to use the children's bike if they are wearing a suitable fitted helmet.
- Have your dealer explain what helmets are suitable for your child.
- Have your dealer show you how to use your child's helmet.

WARNING

Inattentiveness on the road.

Risk of accident and injury!

- Explain to your child that they must not get distracted by other activities while riding, e.g. switching on retrofitted lighting.
- Forbid your child from using mobile devices such as smartphones or MP3 players while riding.

WARNING

Malfunctions in the children's bike due to additions and alterations using incorrect accessories.

Risk of accident and injury!

- Have alterations to the children's bike carried out by your dealer only.
- Only have accessories fitted that meet national road regulations.
- Ask your dealer about suitable accessories.

WARNING

Frame or front fork breakage due to improper use of the children’s bike.

Risk of accident and injury!

- Explain to your child that they must not jump over ramps or mounds of earth with the children’s bike.
- Explain to your child that they must not ride the children’s bike down slopes.
- Explain to your child that they must not ride the children’s bike through deep puddles or near water.
- Explain to your child that they must not ride the children’s bike through terrain that will make it excessively dirty.
- Explain to your child that they must not ride the children’s bike over stairs, kerbs or other steps.

WARNING

Catches on the children's bike.

Risk of accident and injury!

- Only allow your child to use the child bike if your child wears tight leg clothing.
- Make sure that items of clothing, e.g. laces or ribbons, cannot get caught in moving parts.

3 Residual risks

Even if all safety notes and warnings are observed, using the children's bike still entails unforeseeable risks such as:

- Distraction from the road due to childish curiosity
- Misjudgements by the child, for example with regard to traction, speed or their own riding ability
- Incorrect behaviour by other road users
- Unforeseeable road conditions e.g. slipperiness due to black ice
- Component breakage or failure due to unforeseeable material defects or material fatigue.

4 Proper use

Neither the manufacturer nor the dealer accept any liability for damage caused due to improper or incorrect use.

Warranty claims may be endangered and may expire if the vehicle is not used as intended.

The children's bike is designed for use by one person, with the seating position correctly adjusted to suit their height (see the "Basics / Seating position" chapter in the cycle user manual). Carrying additional people, e.g. on the luggage carrier, is not permitted.

The maximum gross weight limit, if applicable, is marked on the frame of the children's bike as well as recorded on the data sheet provided by the dealer, and must not be exceeded.

Children's bikes that are not equipped for use on the road are designed solely for home use. For use on the road, the children's bike must have or be retrofitted with the equipment necessary to meet national and regional regulations.

The children's bike is not designed for above-average stress; for example, use at races and competitive events is deemed improper.

The children's bike is not designed for use with a child seat.

Proper use of the children's bike on the road requires the person using the bike to know, understand and apply national and regional regulations.

Proper use of the children's bike on the road requires the bike to meet national and regional regulations (see the "Safety / Notes on road use" chapter in the cycle user manual).

Use the children's bike only as described in this user manual. Any other use is deemed improper and may result in accidents, injury or property damage.

5 Basics

This chapter contains notes on road use and information allowing the children's bike to be put into use.

5.1 Notes on road use

The following applies to children's bikes that, when purchased, have equipment that is not permitted for road use: If the children's bike is to be used on the road, have the children's bike retrofitted with the necessary components.

- Acquaint yourself with national and regional regulations on equipment for children's bikes before the first ride. For example:
  - Compulsory helmet use
  - Compulsory use of reflective safety vests
  - Brakes
  - Lighting and reflectors
  - Bell
  - Only allow your child to ride on the road if the equipment meets national and regional road regulations.
  - If necessary, have the children's bike retrofitted with any necessary equipment prior to use on the road.
  - Explain to your child the national and regional regulations on equipment for children's bikes.
  - If in doubt, consult your dealer.
- Acquaint yourself with national and regional road regulations. Children and young people are generally subject to different regulations than adults.
  - Explain the traffic code to your child, along with how they should behave on the road.
  - Explain to your child the national and regional regulations on using:
    - Footpaths
    - Bike paths
    - Roads
- Only allow your child to ride on the road alone if:
  - This is permitted by national and regional regulations.
  - You are confident about your child using the road.
- Explain to your child how to be defensive and careful on the road.
- Teach your child to ride so as not to harm, endanger, impede or inconvenience anyone.

- Only allow your child to ride the children's bike if they are wearing a suitable fitted helmet. Consult a dealer about choosing a suitable helmet.

- Many places offer courses for children. These courses teach your child how to ride a bike and how to behave on the road in a fun way.
- Laws and regulations can change at any time. Acquaint yourself with national and regional regulations on a regular basis and explain them to your child.

5.2 Notes on the brakes

The children's bike is equipped with at least two independent brakes, one for the front wheel and one for the rear wheel. One of these brakes or an additional brake may be a coaster brake.

WARNING

The braking behaviour of a rim brake changes in the wet.

Risk of accident and injury!

- Have your child keep off the road while they practice braking in the wet.
- Explain to your child that they must ride slowly in the wet.

5.3 Before every ride

The following points must be noted before every ride:

- Check the children's bike thoroughly for damage and excessive wear before your child uses it (see the "Basics / Inspection instructions" chapter).
- Explain to your child that they must not use the children's bike if it is damaged.

5.4 Inspection instructions

The following points must be noted before every ride:

- Check the condition of the frame and components.
  - Check all components for deformation, cracks and discolouration.
  - Check whether the handlebars, pedals and saddle are correctly fastened and adjusted (see the "Basic adjustments" in the cycle user manual).
  - If your children's bike is equipped with a luggage carrier, check whether the carrier is correctly fastened.
  - If your children's bike is suitable for a luggage carrier and is retrofitted with one, check whether the carrier is correctly fastened.
- Test the functionality of the brakes.
  - Operate the brake levers and coaster brake, and listen for unusual noises.
  - Check that the children's bike is difficult or impossible to push with the brake applied so that the bike can safely be brought to a standstill while riding.
  - Check whether there is any brake pad grinding when the brake levers are released.
- Test the functionality of the lighting and bell.
  - Switch on the lighting. Check whether the headlamp and rear lamp are lit. To do so, turn the wheel where the dynamo is fitted, or check the battery charge level if battery-powered lighting has been retrofitted.
  - Check whether you hear a clear sound when you operate the bell.

5.5 Before the first ride

WARNING

Distraction of the child due to unexpected behaviour from the children's bike, e.g. when braking.

Risk of accident and injury!

- Only allow your child to use the children's bike on the road once they know how the bike behaves and are familiar with its operation.

The dealer will fully assemble the children's bike and customise the handlebars, saddle and brake levers for your child.

- When you receive the children's bike, check whether your child can ride it comfortably and safely, and that all the adjustments fit your child.
- Have adjustments carried out by a dealer only.
  - If you make adjustments yourself, ask a dealer about the applicable torques and use a torque wrench.
  - If you make adjustments yourself, check them properly and thoroughly before your child uses the children's bike.
- Familiarise yourself with the children's bike before your child rides it for the first time, and explain all the controls to your child.
- Keeping off the road, practice with your child so that they get accustomed to the handling characteristics of the children's bike.
- Practice with your child how to mount, dismount and stop safely.
- Have your child practice braking, particularly using a coaster brake (if available), at low speed.
- Have your child practice emergency braking.
- Practice with your child how to indicate direction when making turns, and how to look over their shoulder.
- Only allow your child to ride the children's bike once you feel it is responsible to do so.

6 Stabilisers

Stabilisers (or training wheels) are auxiliary wheels that support a child while they are learning to ride a bike. They prevent the children's bike from tipping over.

- Assess whether your child needs stabilisers while learning to ride.
- If your child needs stabilisers while learning to ride, use the stabilisers supplied (if applicable).
- If no stabilisers are supplied, contact your dealer about selecting and fitting suitable stabilisers.

6.1 Fitting stabilisers

WARNING

Incorrectly or poorly fitted stabilisers can cause malfunctions such as the rear wheel falling off.

Risk of accident and injury!

- If you lack the necessary expertise and the tools required to fit the stabilisers, contact your dealer.

Depending on the model, suitable stabilisers may be supplied with the children's bike. The enclosed stabilisers should be used if stabilisers are required.

Care is required when fitting the stabilisers so that they serve their purpose correctly and safely.

- If stabilisers are not supplied, ensure that they are purchased to fit the children's bike. The bolts on the rear wheel of the children's bike must be long enough that the stabilisers can be securely fastened on both sides.
  - Consult your dealer about suitable stabilisers if necessary.
- Refer to information from the manufacturer about fitting stabilisers.

1. Completely unscrew the cap nuts from both sides of the axle by turning them anti-clockwise.
2. Remove the attached hub axle washer from the axle.

Stabilisers often consist of several parts.

3. Assemble them as described in the manufacturer's instructions.
4. Attach the first assembled stabiliser to the axle of the children's bike, push the hub axle washer on to the axle and tighten the cap nut again, observing the applicable torque (see "Illustr.: Fitting a stabiliser").
5. Attach the second assembled stabiliser to the axle of the children's bike, push the hub axle washer on to the axle and tighten the cap nut again, observing the applicable torque (see "Illustr.: Fitting a stabiliser").
   - ➔ When tightening the cap nut, ensure that the rear wheel forms a straight line with the frame and front wheel.
   - ➔ When tightening the cap nut, ensure that the chain is still tensioned.

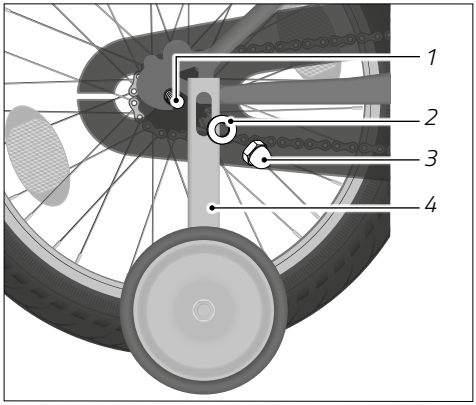

Illustr.: Fitting a stabiliser (example)

1 Rear wheel axle
2 Hub axle washer
3 Cap nut
4 Stabiliser (training wheel)

The stabilisers are height-adjustable.

- ➔ Check where the slotted holes for this purpose are positioned on the stabilisers that you installed. Refer to the fitting information enclosed by the manufacturer.

Both stabilisers should be the same distance from the ground. When holding the children's bike straight, the stabilisers should not touch the ground.

6.2 Removing stabilisers

1. Turn both cap nuts until you can remove them from the axle.
2. One by one, remove the hub axle washers and the stabilisers from the axle.
3. Push the hub axle washers onto the axle and tighten the cap nuts, observing the applicable torque.
4. When tightening the cap nut, ensure that the rear wheel forms a straight line with the frame and front wheel.
5. When tightening the cap nut, ensure that the chain is still tensioned.

ACCELL GROUP

User manual

Balance bike

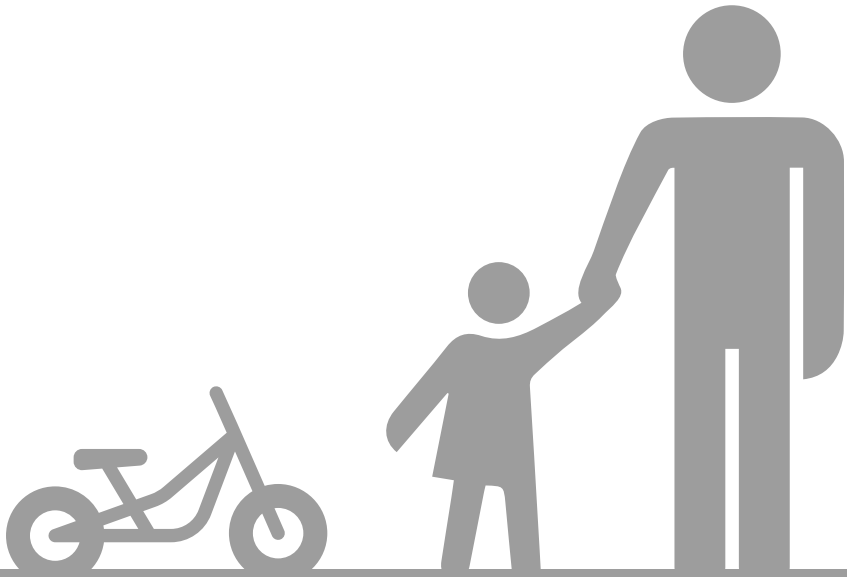

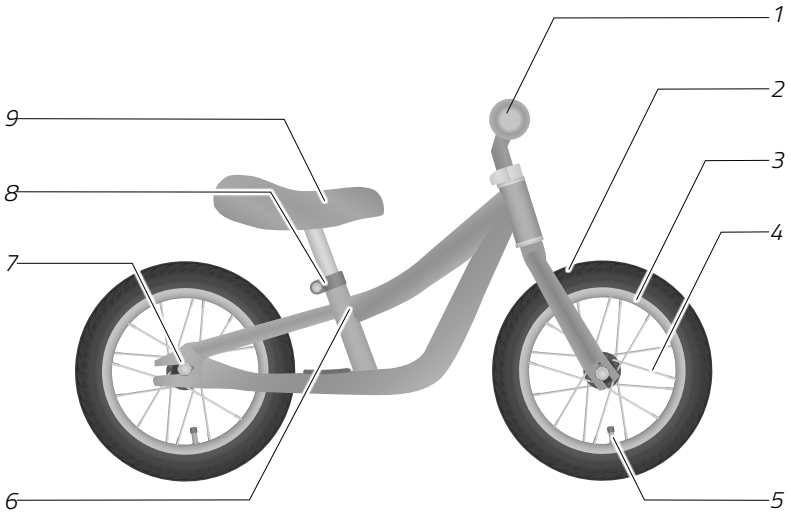

1	Handlebar grips and handlebars	6	Seat tube
2	Tyre	7	Wheel hub with cap nut
3	Rim	8	Seat post clamp
4	Spoke	9	Saddle
5	Valve		

Example illustration

Contents

1 Basics 1
- 1.1 Applicability 1
- 1.2 Reading and storing the user manual 1
- 1.3 Notes on screw turning directions 1
- 1.4 Notes on torques 2

2 Safety notes 3

3 Residual risks 6

4 Proper use 7

5 Age rating 7

6 Use 7
- 6.1 A note on braking 7
- 6.2 Helmet 8
- 6.3 Before every ride 8
- 6.4 Inspection instructions 9
- 6.5 Before the first ride 9
- 6.6 After a fall 10

7 Basic adjustments 11
- 7.1 Adjusting the saddle 12
- 7.2 Checking and adjusting the tyre pressure 13
- 7.3 Reducing the tyre pressure 14

8 Cleaning 15
- 8.1 Cleaning products required 15
- 8.2 Cleaning the balance bike 15

9 Maintenance 17
- 9.1 Inspection intervals 18
- 9.2 Checking the screw joints 19
- 9.3 Checking the frame and front fork 19

9.4 Checking the saddle 19
9.5 Checking the handlebars 19
9.6 Checking the front wheel and rear wheel 20
9.7 Checking the rims and spokes 21
9.8 Checking the tyres 21
9.9 Checking the safety elements 21

10 Storage 22

11 Disposal 23
11.1 Balance bike 23
11.2 Packaging 23
11.3 Tyres and inner tubes 23
11.4 Lubricants and care products 23

12 Declaration of conformity 23

1 Basics

1.1 Applicability

This user manual applies to balance bikes which are not approved for use on the road. The balance bike is marked with the following cycle category symbol.

Symbol	Cycle category	Use
	12" balance bike	Only for use under adult supervision. Not suitable for use on the road. Maximum gross weight limit: 30 kg/66 lbs.

1.2 Reading and storing the user manual

This user manual contains important information about using the balance bike, and is aimed at parents and guardians. Read all the warnings and notes in this user manual carefully before allowing your child to use the balance bike, and explain all the contents to your child.

Only allow your child to use the balance bike once you have read and understood this user manual.

Keep the user manual to hand so that it is available at all times. If passing the balance bike on to a third party, include the user manual along with it.

1.3 Notes on screw turning directions

NOTE

Material damage due to handling screw joints incorrectly.

Risk of damage!

➔ Observe the turning direction of screws, thru-axles and nuts.

➔ Tighten screws, thru-axles and nuts by turning them clockwise.

➔ Loosen screws, thru-axles and nuts by turning them anticlockwise.

In the event of any deviation from this rule, the change in turning direction will be indicated in the respective chapter. Refer to the relevant notes.

1.4 Notes on torques

WARNING

Material fatigue due to tightening screw joints incorrectly.

Risk of accident and injury!

- Do not allow your child to use the balance bike if you find any loose screw joints.
- Screw joints must be properly tightened with a torque wrench.
- Screw joints must be tightened using the correct torques.

To correctly tighten the screw joints, the applicable torques must be observed. This requires a torque wrench with an appropriate adjustment range.

- If you have no experience with using torque wrenches or do not own a suitable torque wrench, have the screw joints checked by your dealer.

The correct torque for a screw joint is dependent on the material and diameter of the screw, as well as the material and design of the component.

- If tightening screw joints, check whether the balance bike is equipped with aluminium components (see the specifications data sheet provided by the dealer).
  - Observe the specific torques for aluminium components.

Individual components on the balance bike are labelled with torque specifications or insertion depth markings.

- Follow these specifications and markings.

2 Safety notes

WARNING

Entanglement and suffocation or injury due to playing with packaging material.

Risk of suffocation and injury!

- Do not allow young children to play with the packaging materials, particularly the packaging film. Children may become entangled in it and suffocate or cut themselves.

WARNING

Swallowing small parts.

Risk of suffocation!

- Do not allow your child to play with small parts that could be swallowed.

WARNING

Danger for the child due to using the balance bike without supervision.

Risk of accident and injury!

- Supervise your child when they are playing with the balance bike.
- Only allow your child to ride while wearing bright and conspicuous clothing, e.g. with reflective elements.
- Do not allow your child to ride near stairs, kerbs, slopes or water.
- Do not allow your child to ride in areas with traffic (e.g. parking facilities or private courtyards).

WARNING

Danger for the child due to operating the balance bike incorrectly.

Risk of accident and injury!

- Explain to your child how to operate the balance bike.
- Teach your child about the dangers, e.g. falls and collisions, which could arise through using the balance bike.
- Practice with your child how to use the balance bike so as to prevent falls or collisions.

WARNING

Longer braking distance and reduced traction due to slippery or dirty roads.

Risk of accident and injury!

- Explain to your child that they must adapt their riding style and speed to suit the weather and road conditions.
- Ensure that your child adapts their riding style and speed to suit the weather and road conditions.

WARNING

Injury due to lack of or incorrect footwear.

Risk of accident and injury!

- Only allow your child to use the balance bike when they are wearing closed toe, non-slip shoes with hard soles.

WARNING

Risk of injury due to falling without a helmet or protective gear.

Risk of injury!

- Only allow your child to use the balance bike when they are wearing a suitable fitted helmet.
- Only allow your child to use the balance bike when they are wearing protectors such as elbow and knee pads.
- Only allow your child to use the balance bike when they are wearing long and, if necessary, padded clothing.

WARNING

Danger for the child due to using the balance bike on unsuitable ground.

Risk of accident and injury!

- Only allow your child to ride on clean, dry and even ground.
- Do not allow your child to play on cross-country terrain or on steep paths.

WARNING

Pinch points on the balance bike.

Risk of accident and injury!

- Only allow your child to use the balance bike when they are wearing close-fitting clothing on their legs.
- Ensure that items of clothing, such as laces or belts, cannot become entangled in moving parts.

WARNING

Missing safety elements.

Risk of injury!

- Before every ride, check that all safety elements such as protective caps on nuts, the bumpers on the handlebar stem and the ends of the handlebar grips are properly fitted and undamaged.

WARNING

Malfunction of the balance bike due to improper additions or alterations to the bike or incorrect accessories.

Risk of accident and injury!

- Have your dealer carry out alterations to the balance bike.
- Only have original accessories fitted.
- Do not have any accessories with sharp edges fitted.

3 Residual risks

Even if all safety notes and warnings are observed, using the balance bike still entails unforeseeable risks such as:

- The child being distracted due to childish curiosity and interest in their surroundings
- Overestimation of the child's riding ability
- Incorrect behaviour by other road users
- Unforeseeable road conditions e.g. slipperiness due to black ice
- Component breakage or failure due to unforeseeable material defects or material fatigue.

- Check the balance bike for material defects or fatigue before every ride.
- Have the balance bike checked by your dealer for damage and breakage after a fall or accident.

4 Proper use

Neither the manufacturer nor the dealer accept any liability for damage caused due to improper or incorrect use.

Warranty claims may be endangered and may expire if the vehicle is not used as intended.

The balance bike is designed for private use in a suitable play area.

The balance bike is designed for private use by children aged 3 years and up on private property. The maximum gross weight limit is marked on the frame of the balance bike as well as recorded on the specifications data sheet provided by the dealer, and must not be exceeded. The balance bike is not considered a cycle for traffic code purposes.

The balance bike is designed for use by a single child on surfaced ground.

The balance bike is not designed for the following accessories to be fitted or used:

- Luggage carrier
- Child seat
- Child trailer

The child may only use the balance bike as described in this user manual. Any other use is deemed improper and may result in serious injury or property damage.

5 Age rating

	Please note: the balance bike is not designed for children under 3 years of age.

6 Use

This chapter contains information about basic adjustments to the balance bike, and information about how to put the balance bike into use.

6.1 A note on braking

The balance bike does not have a brake.

➔ Explain to your child how they can brake and stop safely using their feet.

6.2 Helmet

A helmet protects the head in the event of a fall or accident.

- Only allow your child to use the balance bike when they are wearing a suitable fitted helmet.
  - Consult your dealer when choosing a suitable helmet.
  - Have your dealer explain how to correctly adjust the helmet.

6.3 Before every ride

WARNING

Excessive wear or loosened screw joints due to movement and vibration.

Risk of accident and injury!

- Have your dealer show you how to check for excessive wear or loosened screw joints.
- Check the balance bike according to the inspection instructions before every ride.
- Only allow your child to use the balance bike if you do not find any damage.
- Only allow your child to use the balance bike if there is no excessive wear and all screw joints are tight.

- Check the balance bike for damage and excessive wear before every ride (see the "Use / Inspection instructions" chapter).
- Regularly check your child's seating position and have adjustments made by your dealer if necessary.

6.4 Inspection instructions

The inspection instructions assume that all the contents of the user manual have been read, understood and observed.

- Check the condition of the frame and all components.
  - Check all components for deformation, cracks and discolouration.
  - Check whether all components are correctly fastened and aligned.
  - Check safety elements such as protective caps for damage.
- Your child may only use the balance bike once you have identified all the components as being functional.
- If you find a non-functional component, have it repaired by your dealer.

6.5 Before the first ride

WARNING

Component or balance bike failure due to changes in the spokes or screw joints after the first few kilometres.

Risk of accident and injury!

- Have the balance bike serviced regularly by your dealer. Observe the specified inspection intervals.

The balance bike has been fully assembled and adjusted by the dealer, and is ready to ride. Notes on inspection intervals can be found in the “Maintenance” chapter.

- Familiarise yourself with the balance bike before your child uses it.
- Explain to your child how to use the balance bike.
- Practice with your child how to mount and dismount.
- Have your child practice braking with their feet at low speed (see the “Use / A note on braking” chapter).

6.6 After a fall

WARNING

Damage to components due to a fall.

Risk of accident and injury!

- Do not straighten deformed components.
- Have deformed or damaged components replaced by your dealer immediately.
- If you find or suspect that the balance bike is damaged, do not use it.

- Check all components after minor falls, e.g. when the balance bike has fallen over (see the “Maintenance” chapter).
- Have damage repaired by your dealer.

7 Basic adjustments

WARNING

Material breakage or component damage due to a lack of knowledge when making adjustments.

Risk of accident and injury!

- Have balance bike components adjusted by your dealer.
- Do not make any adjustments to balance bike components if you lack the necessary expertise and the tools required.

WARNING

Material fatigue and material breakage due to tightening screw joints incorrectly.

Risk of accident and injury!

- Have your dealer tighten loose screw joints.
- Loose screw joints must be properly tightened to the correct torque using a torque wrench.

The dealer will fully assemble the balance bike and adjust the saddle to your child's height.

- When you receive the balance bike, check whether your child can ride it comfortably and safely, and that the adjustments fit your child.
- If you lack the necessary expertise and the tools required, have adjustments carried out by your dealer.
  - If you make adjustments yourself, ask your dealer about the applicable torques and use a torque wrench.
  - If you make adjustments yourself, check them properly and thoroughly before you allow your child to use the balance bike.

7.1 Adjusting the saddle

WARNING

Material breakage or damage to the seat post due to a lack of knowledge when making adjustments.

Risk of accident and injury!

- Have the seat post adjusted by your dealer.
- Do not adjust the seat post yourself if you lack the necessary expertise and the tools required.
- If you adjust the seat post yourself, ensure that the marking on the post is not visible.

The saddle height must be adjusted so that the balance bike is adapted to suit the size of the child.

1. Loosen the bolt in the seat post clamp until the seat post can be moved.
2. Adjust the saddle height so that your child can put both feet flat on the ground when sitting on the saddle.
3. Make sure that the marking on the seat post is not visible (see “Illustr.: Seat post marking”).
4. Twist the saddle so that the frame and saddle form a straight line.
5. Tighten the bolt, observing applicable torques (see the “Basics / Notes on torques” chapter).

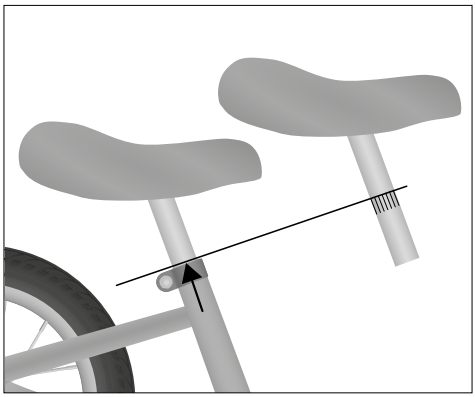

Illustr.: Seat post marking (example)

7.2 Checking and adjusting the tyre pressure

WARNING

Tyre blow-out or damage due to incorrect tyre pressure.

Risk of damage!

- Use a pump with a pressure display to inflate the tyres.
- Only inflate the tyres to the permitted tyre pressure.
- Do not allow your child to ride with damaged, cracked or excessively worn tyres.
- Have your dealer explain how to check and adjust the tyre pressure if necessary.

The tyre pressure is crucial to the rolling resistance and suspension of the balance bike.

Tyre pressure figures may be given in psi (pounds per square inch), kPa (kilopascals) or bar, depending on the manufacturer.

1. Read the maximum permitted tyre pressure on the sidewall of the balance bike tyre (see "Illustr.: Tyre with tyre size specification").

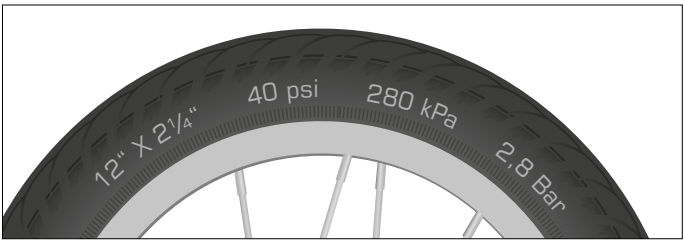

Illustr.: Tyre with tyre size specification (example)

2. To adjust the tyre pressure or inflate the tyre, unscrew the protective cap from the valve.
3. Place an air pressure gauge or a pump with a pressure display onto the valve and read off the tyre pressure.
   - If the tyre pressure is too low, inflate the tyre with a pump.
   - If the tyre pressure is too high, let air out of the tyre (see the "Basic adjustments / Reducing the tyre pressure" chapter).

4. Choose a tyre pressure that is suitable for your child's weight, up to the upper limit specified on the tyre.
5. Screw the protective cap hand-tight onto the valve after adjusting the tyre pressure.
6. After adjusting the tyre pressure, check whether the lower knurled nut is firmly in place and hand-tighten if necessary.

7.3 Reducing the tyre pressure

The tyre pressure can be reduced by letting air out of the inner tube via the valve.

- To reduce the tyre pressure, remove the protective cap and open the valve until air escapes.
- Close the valve after reducing the tyre pressure and hand-tighten the protective cap.

8 Cleaning

8.1 Cleaning products required

The following can be used for cleaning the balance bike:

- Clean cloths
- Mild, lukewarm soapy water
- A soft cleaning sponge or a cleaning cloth
- A soft brush
- Care products and preservers

➔ Consult your dealer about suitable care products and preservers.

8.2 Cleaning the balance bike

WARNING

Insufficient knowledge or ability.

Risk of accident and injury!

➔ Do not allow the children's bike to be used by children with reduced physical, sensory or mental capabilities or with a lack of experience and expertise.

➔ Do not allow children to carry out cleaning, care and maintenance alone.

WARNING

Pinching and crushing of body parts due to lack of knowledge or incorrect behaviour during cleaning.

Risk of injury!

➔ Ensure that you keep your fingers and hands away from moving components.

➔ Ensure that your fingers and hands do not get caught.

NOTE

Cleaning the balance bike incorrectly.

Risk of damage!

- Do not use abrasive cleaning products.
- Do not use running water.
- Do not use sharp or metallic cleaning tools.
- Do not use a high-pressure washer or electrical cleaning devices.

The following points must be noted with regard to cleaning the balance bike:

- Clean the balance bike regularly, even if it is only slightly dirty.
- Wipe all surfaces and components with a damp cloth.
- Use mild soapy water to moisten the cloth.
- Wipe all surfaces and components dry after cleaning.
- Preserve all paintwork and metallic surfaces on the frame at least every six months.
  - Contact your dealer if you have any questions about suitable cleaning products.

9 Maintenance

WARNING

Malfunctioning components due to incorrect or inadequate maintenance.

Risk of injury!

- Only carry out maintenance yourself if you have the necessary expertise and the tools required.
- Have the balance bike maintained by your dealer at least once a year.

WARNING

Material fatigue and material breakage due to tightening screw joints incorrectly.

Risk of accident and injury!

- Have your dealer tighten loose screw joints.
- Loose screw joints must be properly tightened to the correct torque using a torque wrench.

WARNING

Pinching and crushing of body parts due to lack of knowledge or incorrect behaviour during maintenance.

Risk of injury!

- Ensure that you keep your fingers away from moving components.
- Ensure that your fingers do not get caught.
- Wear protective gloves.

The balance bike must be serviced regularly.

- Carry out the following maintenance once a month or after a fall.
- If you find any damage during maintenance, do not allow your child to continue using the balance bike and have the bike checked or repaired by your dealer.
- Have your dealer document all maintenance and repairs that they carry out.
- If you carry out maintenance work yourself, ask your dealer about the applicable torques and use a torque wrench.
- If you carry out maintenance work yourself, check the balance bike thoroughly after the maintenance before you allow your child to use the bike.

9.1 Inspection intervals

- Have your dealer inspect the balance bike at the following intervals:

Inspection intervals		
Inspection	Hours of operation	Duration of use
1st Inspection	after 15 hours of operation* or	after 3 months*
2nd Inspection	after 100 hours of operation* or	after one year*
Each subsequent inspection	after a further 100 hours of operation* or	after a further year*
*whichever is the earliest		

Your balance bike has a variety of parts that require particular attention, especially with regard to their exposure to dirt, dust or moisture, or simply because of their relevance to safety. It is therefore in your own interest to observe the inspection intervals.

9.2 Checking the screw joints

- Lift the balance bike around 5 cm/2" and carefully let it bounce on the ground. Listen for unusual noises.
  - If you hear unusual noises, tighten the relevant screw joints (see the “Basics / Notes on torques” chapter).
  - Have loose screw joints tightened by your dealer if you lack the necessary expertise or the tools required.

9.3 Checking the frame and front fork

- Check the frame and front fork for deformation, cracks or discolouration (visual inspection).
  - If the frame or the front fork is deformed, cracked or discoloured, have it checked by your dealer immediately and do not allow your child to ride the balance bike.

9.4 Checking the saddle

- Check whether the saddle can be twisted.
  - If you can twist the saddle, adjust the seat post clamp (see the “Basic adjustments / Adjusting the saddle” chapter).

9.5 Checking the handlebars

- Check whether the handlebars are aligned perpendicularly to the front wheel (see “Illustr.: Correct handlebar alignment”).
  - Have the handlebars adjusted by your dealer if they are not perpendicular to the front wheel.

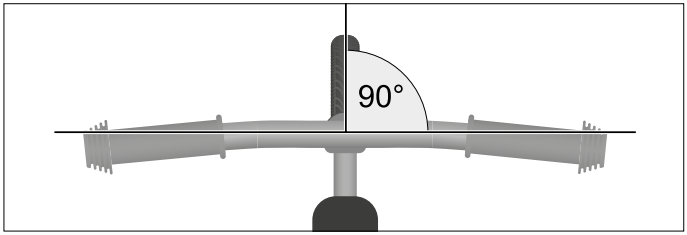

Illustr.: Correct handlebar alignment (example)

- Fix the front wheel in place to prevent it twisting sideways, by placing it in a bike rack for example, and check whether the handlebars can be turned relative to the front wheel.
  - If you can twist the handlebars, have them or the handlebar stem adjusted by your dealer.
- Check whether the handlebars can be moved up and down.
  - If you detect play in the head tube or handlebars when pulling the handlebars up and down, have the head tube or handlebars adjusted by your dealer.
- Check the handlebars and handlebar stem for cracks, deformation or discolouration (visual inspection).
  - If the handlebars or handlebar stem are cracked, deformed or discoloured, have them checked by your dealer immediately and do not allow your child to ride the balance bike.

9.6 Checking the front wheel and rear wheel

1. Hold the balance bike firmly by the front fork or frame.
2. Try to move the front or rear wheel sideways. Check whether the wheel nuts move as you do so.
   - If the wheel nuts move, tighten them (see the “Basics / Notes on torques” chapter).
3. Lift the balance bike and turn the front or rear wheel. Check whether the front or rear wheel swings sideways or outwards.
   - If the front or rear wheel swings sideways or outwards, do not use the balance bike and have the wheel checked by your dealer.

9.7 Checking the rims and spokes

1. Check the front and rear rims for cracks, deformation or discolouration (visual inspection).
   - ➔ If a rim is cracked, deformed or discoloured, do not allow your child to ride the balance bike.
2. Squeeze the spokes together gently with your thumb and fingers, checking whether the tension is the same for all spokes.
   - ➔ If the tension varies or spokes are loose, have the spokes tensioned by your dealer.

Alternatively, you can run a wooden or plastic rod across the spokes and listen for differences in sound.

9.8 Checking the tyres

1. Check whether the tyre pressure is correct (see the "Basic adjustments / Checking and adjusting the tyre pressure" chapter).
2. Check the tyres for cracks and damage from foreign bodies.
3. Check whether you can clearly feel the tyre tread.
   - ➔ If a tyre is cracked or damaged, or the tread depth is too low, have the tyre replaced by your dealer and do not let your child ride the balance bike.
4. Check whether the valves are firmly in place and hand-tighten the lower knurled nut if necessary by turning it clockwise.
5. Check whether the valves have a protective cap.
   - ➔ If the protective cap is missing, replace it.

9.9 Checking the safety elements

- ➔ Check that the safety elements, such as protective caps over nuts or on the handlebars, are in place and undamaged.
  - ➔ If safety elements are missing or damaged, have them replaced by your dealer.

10 Storage

If the balance bike will not be used for a prolonged period, the following points must be noted with regard to storage:

- Clean the balance bike (see the “Cleaning” chapter).
- Store the balance bike in a dry, frost-free place where it is protected against major fluctuations in temperature.
- To prevent tyre deformation, store the balance bike hanging by its frame.

11 Disposal

11.1 Balance bike

Do not dispose of your balance bike in household waste. Take it to a municipal collection point or a recycling centre.

Alternatively, there are also collections organised by local councils and private organisations. Contact your local council about this or refer to postal information.

11.2 Packaging

Any kind of packaging must be disposed of separately. Add cardboard and paperboard to the waste paper and foils in the recyclable waste collection or ask your dealer for disposal.

11.3 Tyres and inner tubes

Tyres and inner tubes must not be disposed of in household waste.

Ask your dealer whether they take care of collection and disposal, or take these items to a recycling centre or municipal collection point.

11.4 Lubricants and care products

Do not dispose of lubricants and care products in household waste, into the sewer system or into the environment. They must be taken to a hazardous waste collection point.
Also follow the notes included on the packaging of such products.

12 Declaration of conformity

You can find the declaration of conformity enclosed with your balance bike. With the declaration of conformity, the manufacturer of your balance bike confirms that the product meets all requirements and other relevant provisions in standard EN 71 and directive 2009/48/EC.

Glossary

Term in this original operating manual	Replaces the following term (based on official standards)*	Explanatory/alternative name
Aero handlebars	Aerodynamic extension (DIN EN ISO 4210-1)	Triathlon handlebars, time trial handlebars
Fork ends	Front fork ends (DIN EN 15532)	
Schrader valve (SV)	Schrader valve (DIN EN 15532)	American valve
Brake pad	Brake block (DIN EN 15532)	
Brake force modulator	Brake force modulator (DIN EN ISO 4210-2)	Power modulator
Brake cable	Inner cable (DIN EN 15532 and DIN EN ISO 4210-2)	
Cycle		Bikes, racing bikes, pedelecs, S-pedelecs, children's bikes and balance bikes are referred to collectively as cycles.
Cycle passport	(see cycle)	Bike passport
Pinch point		Place where body parts or items of clothing can get caught
Reaction arm	Brake arm (DIN EN 15532)	
Guarantee		Liability for material defects
Helmet	Bike helmet (DIN EN ISO 4210-2), suitable helmet (S-pedelec)	Bike helmets and helmets that are suitable for riding a pedelec/S-pedelec.

Term in this original operating manual	Replaces the following term (based on official standards)*	Explanatory/alternative name
Chainring	Chainwheel (DIN EN 15532)	
Balance bike	Toy bike (EN 71)	
MTB		MTB all-terrain bike (mountain bike)
Pedelec	EPAC (DIN EN 15194)	EPAC, e-bike, pedelec 25, electric bike
Belt	Drive belt (DIN EN ISO 4210-1)	
Seat post		Seat pillar
Shift cable	Cable (DIN EN 15532)	
Pulley	Drive pulley (DIN EN ISO 4210-1)	
Rear lamp		Rear light
Screw joint	Bolted joint (DIN EN ISO 4210-1)	
S-pedelec	L1e directive 2002/24/EC or L1e-B regulation 168/2013	S-EPAC, speed e-bike, pedelec 45
Dunlop valve (DV)	Woods valve (DIN EN 15532)	English or Dutch valve
Luggage system carrier	Luggage carrier (DIN EN 15532)	

*Basis: European standards

Individual cycle characteristics

Brand, model*: _____

Model year: _____ Manufacturer art. no*: _____

Frame shape*: _____ Wheel and frame size*: _____ , _____

Frame number: _____ If applicable, key number: _____

If applicable, VIN (S-pedelec): WWS _____

*as noted on the cycle's data sheet

(X)	Aluminium components	Carbon components
Frame		
Fork		
Handlebars		
Stem		
Seat post		
Crank		
Other components made from aluminium/carbon (rim, saddle etc.)		

Other

Fitting child seats: ( ) permitted ( ) not permitted

Fitting bike trailers: ( ) permitted ( ) not permitted

Cycle meets national road regulations: ( ) Yes ( ) No

Other remarks (deviations from standard equipment, accessories, defects, etc.):

_____

_____

Cycle condition

( ) new

( ) used, distance travelled in km/mi: _____

Handover certificate

The cycle has been delivered complete, together with the following:
(cross or enter number as appropriate)

( ) Rechargeable battery key (pedelec, S-pedelec)

( ) Bike lock key (if different)

( ) Accell Group standard manual

( ) The data sheet containing the technical specifications for the cycle has been supplied

( ) If applicable, additional component instructions

for pedelecs:

( ) If applicable, pedelec drive system quick-start guide with reference to the complete online manual

for S-pedelecs:

( ) EC certificate of conformity for S-pedelecs

( ) If applicable, S-pedelec drive system manual

( ) All features of the cycle have been explained

( ) The cycle has been delivered ready to ride

( ) The cycle has been delivered pre-assembled, with instructions given on making it ready to ride

Purchase or delivery date: _____ Purchase price: _____

Buyer
First and last name: _____

Address: _____

Email: _____ Tel.: _____

Stamp

_____

Dealer:
Location, date (dealer), signature

_____

Customer:
Location, date, signature

1st inspection 300 km / 190 mi / 15 hours of operation / 3 months

Inspection tasks: _____

_____

_____

_____

_____

Date, dealer stamp and signature

2nd inspection 2,000 km / 1,250 mi / 100 hours of operation / 1 year

Inspection tasks: _____

_____

_____

_____

_____

Date, dealer stamp and signature

3rd inspection 4,000 km / 3,750 mi / 200 hours of operation / 2 years

Inspection tasks: _____

_____

_____

_____

_____

Date, dealer stamp and signature

4th inspection 6,000 km / 3,750 mi / 300 hours of operation / 3 years

Inspection tasks: _____

_____

_____

_____

_____

Date, dealer stamp and signature

5th inspection 8,000 km / 3,750 mi / 400 hours of operation / 4 years

Inspection tasks: _____

_____

_____

_____

_____

Date, dealer stamp and signature

6th inspection 10,000 km / 3,750 mi / 500 hours of operation / 5 years

Inspection tasks: _____

_____

_____

_____

_____

Date, dealer stamp and signature

Accell Group original operating manual
LANGUAGE: ENGLISH
ITEM NUMBER: 9950211102
EDITION: 1 | 05/2020

Copyright

The text, images and information in these documents are protected under the copyright of Accell Group N.V.

No translation, reprinting, reproduction or other commercial use such as on electronic media, even in part, is permitted without prior written consent from Accell Group N.V.

Atala spa
via Della Guerrina 108, 20900 Monza , Italia
tel +39 0392045311 | www. atala.it | www. whistlebikes.com